8 ABBREVIATIONS AND SYMBOLS

####	[E] WINDOW/ DOOR SIZE: WIDTH #'-#", THEN HEIGHT #'-#"	HD	HEADER
		LAM	LAMINATE
		LOUV	LOUVERED
		OAE	OR APPROVED EQUAL
ACOU.	ACOUSTIC	MEZZ	MEZZANINE
A.C.T.	ACOUSTIC CEILING TILE	MTD	MOUNTED
ACF	ABOVE [CONC] FLOOR	MTL	METAL
BM	BEAM	NIC	NOT IN CONTRACT
BTM	BOTTOM	NTS	NOT TO SCALE
CABT	CABINET	OD	OUTSIDE DIAMETER
CLG	CEILING	PLYWD	PLYWOOD
CLO	CLOSET	P.O.T.	PATH OF TRAVEL
C.O.	CASED OPENING	PTD	PAINTED
COL	COLUMN	RCP	REFLECTED CEILING PLAN
CNXN	CONNECTION	REFL	REFLECTED
DG	DUAL GLAZED	RFR	REFRIGERATOR
DHNG	DOUBLE-HUNG (WINDOW)	RNG	RANGE
DTL	DETAIL	R.O.	ROUGH OPENING
EQ	EQUAL	RQTS	REQUIREMENTS
EQUIP	EQUIPMENT	SF	SQUARE FEET
EXST	[E] EXISTING	SFFT	SOFFIT
(A)FF	(ABOVE) FINISHED FLOOR	SNK	SINK
FIXD	FIXED (WINDOW)	STSL	STAINLESS STEEL
FLR	FLOOR	TBD	TO BE DETERMINED
FOF	FACE OF FINISH	TRK	TRACK
FRMG	FRAMING	TYP	TYPICAL
GFI	GROUND FAULT INDICATOR	UON	UNLESS OTHERWISE NOTED
GWB	GYPSUM WALLBOARD	WD	WOOD
		W/C	WATER CLOSET
		VIF	VERIFY IN FIELD

12" / 1/4" — FLOOR SLOPE IDENTIFICATION

OFFICE 101 — ROOM IDENTIFICATION

KEYNOTE

DETAIL SYMBOL

SECTION SYMBOL

INTERIOR ELEVATION SYMBOL

DELTA SYMBOL INDICATES DRAWING CHANGE, REVISION # AND BLDG DEPT OBJECTION #

NEW GWB/METAL STUD WALL PARTITION TYPE

EXST WALL

MARK # - SEE SCHED A601

NEW DOOR IN NEW WALL

EXST DOOR

7B CODE ANALYSIS

OCCUPANT [OCC] LOAD CALCULATION [CBC TABLE 1004.1.2]

FUNCTION OF SPACE	GROSS AREA	OCC LOAD	ALLOWED
EXERCISE RMS (MULTIPURPOSE RM)	8,900 SF	1/ 50 GSF	178
STORAGE	900 SF	1/300 GSF	3
BUSINESS	6,900 SF	1/100 GSF	69
		TOTAL =	**250**

EXIT DISTANCE CALCULATION

OCCUPANCY	PROVIDED	MAX DISTANCE ALLOWED
A3	65'	200' (CBC 1017.2) OK

6 AREA OF WORK PHOTOS NTS

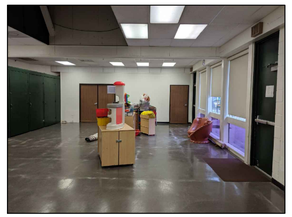

VIEW OUTSIDE [E] STORAGE ROOM

VIEW INSIDE [E] STORAGE ROOM

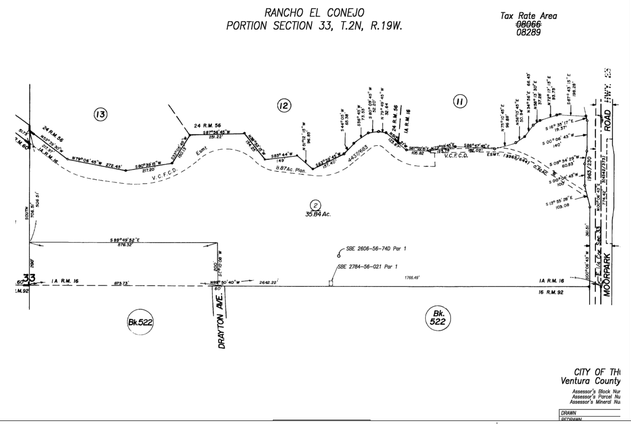

4 ZONING MAP NTS

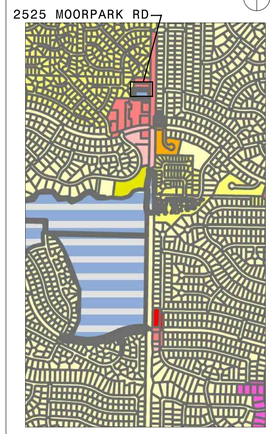

3 VICINITY MAP NTS

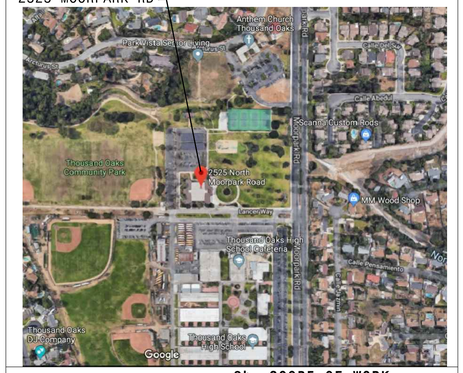

2b SCOPE OF WORK

INTERIOR ALTERATION OF AN EXISTING COMMUNITY CENTER TO INCLUDE (A) CONVERSION OF AN EXISTING STORAGE ROOM TO A NEW HANDICAP ACCESSIBLE CHILDREN'S RESTROOM AND (B) NEW STORAGE CLOSET

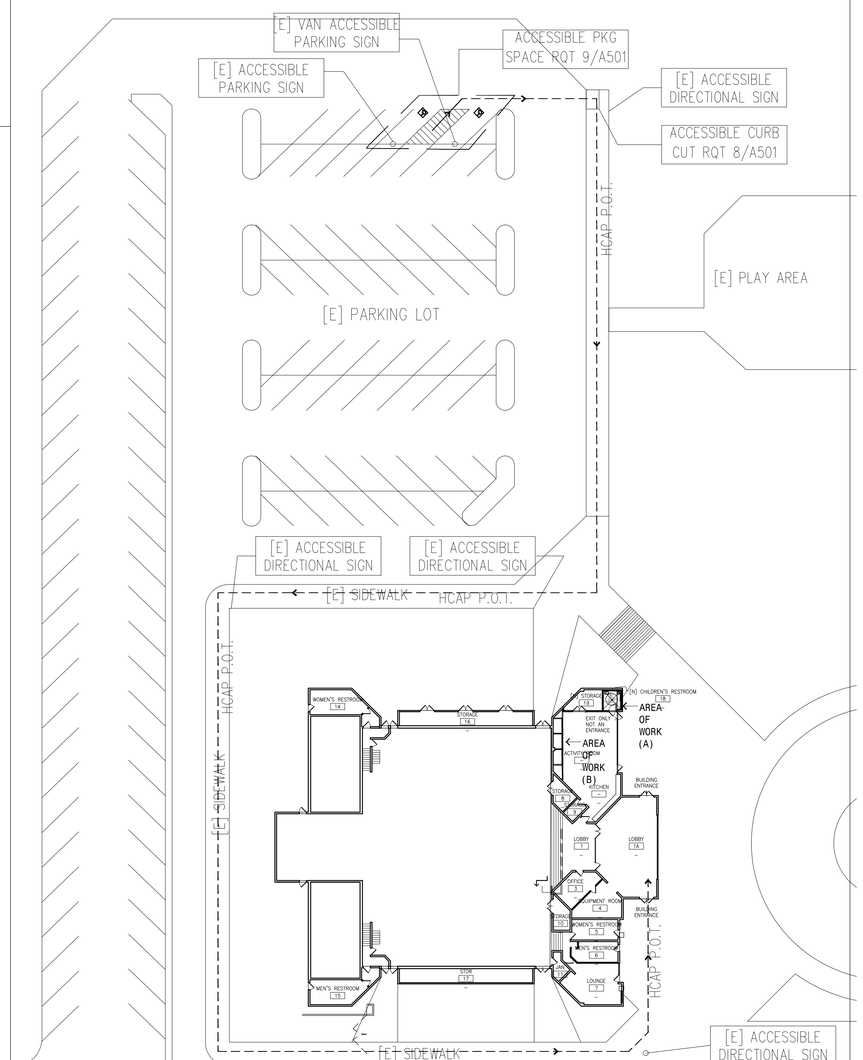

6 AREA SITE PLAN SCALE 1" = 30'-0"
SHOWING ACCESSIBLE P.O.T.

ACCESSIBLE PATH OF TRAVEL NOTE (OUTDOORS)
NO ABRUPT CHANGES IN ELEVATION ALONG THE PATH OF TRAVEL SHOWN. THE SLOPE AND CROSS SLOPE ALONG THE PATH OF TRAVEL SHALL NOT EXCEED 5% AND 2% RESPECTIVELY. INSPECTOR TO VERIFY.

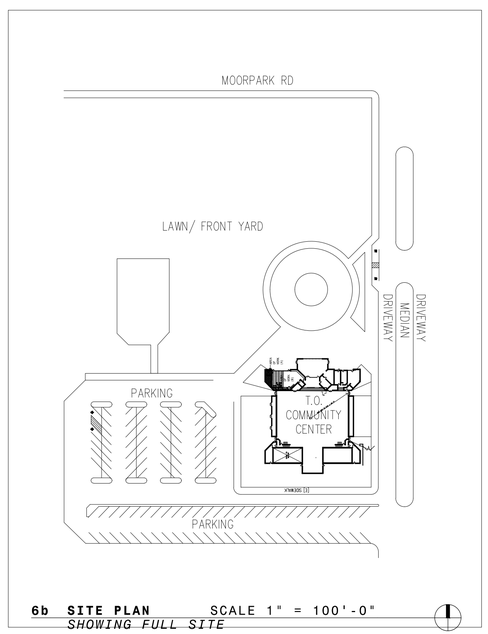

6b SITE PLAN SCALE 1" = 100'-0"
SHOWING FULL SITE

2 PROJECT INFORMATION

PROPERTY INFORMATION

CITY	THOUSAND OAKS
COUNTY	VENTURA
APN	5210100025
ADDRESS	2525 N MOORPARK RD, THOUSAND OAKS, CA 91362

ZONING CHARACTERISTICS

ZONING DIST	O-S
LOT AREA	52.23 AC

BUILDING CHARACTERISTICS

OCCUPANCY CLASSIFICATION	A-3	SPRINKLERS NO
CONSTRUCTION CLASSIFICATION	TYPE I-B	
BUILDING AREA	16,700 SF +/-	
BUILDING HEIGHT	1 STORY	

CODE JURISDICTIONS

BUILDING	CITY OF THOUSAND OAKS
FIRE	COUNTY OF VENTURA
ARCH&STRUCT	2016 CCR T24 P2 V1&V2 [CBC]
MECHANICAL	2016 CCR T24 P4 [CMC]
PLUMBING	2016 CCR T24 P5 [CPC]
ELECTRICAL	2016 CCR T24 P6 [CEC]
FIRE	2016 CCR T24 P9 [CFC]
GREEN BLDG	2016 ENERGY STANDARDS
ACCESSIBILITY	2016 CCR T24 P2 V1 CH11B & FEDERAL ADA
LOCAL AMENDMENTS	CITY OF THOUSAND OAKS

1 SHEET INDEX

		ISSUE DATES				
MECHANICAL DRAWINGS		09/13/19				
S1.0	MECHANICAL PLAN	■				
PLUMBING DRAWINGS		09/13	11/13			
P-1.0	PLUMBING LEGEND, GENERAL NOTES & SCHEDULES	■	■			
P-2.0	PLUMBING OVERALL PLAN	■	■			
P-2.1	PLUMBING ENLARGED PLAN	■	■			
P-3.0	PLUMBING DETAILS	■	■			
ELECTRICAL DRAWINGS		06/28				
E0.00	GENERAL NOTES	■				
E0.01	CONSTRUCTION NOTES	■				
E0.02	SPECIFICATIONS	■				
E0.03	LIGHTING SCHEDULE	■				
E1.00	LIGHTING AND POWER PLAN	■				
T0.01	ENERGY TITLE 24	■				
T0.02	ENERGY TITLE 24	■				

		ISSUE DATES				
ARCHITECTURAL DRAWINGS		08/07/19	09/23/19	10/25/19	11/07/19	01/15/20
G-001.00	COVER SHEET/SITE PLN		■	■	■	■
G-002.00	GENERAL NOTES		■	■	■	
G-003.00	SPECIFICATIONS		■	■	■	
G-101.00	ACCESSIBILITY NOTES		■	■	■	
G-102.00	ACCESSIBILITY NOTES		■	■	■	
G-103.00	ACCESSIBILITY NOTES		■	■	■	
G-104.00	CAL GREEN NOTES		■	■	■	
G-105.00	CAL GREEN & FP NOTES		■	■	■	
A-101.00	PROPOSED AND DEMO PLANS	■	■	■	■	
A-111.00	STORAGE CLOSET FLOOR PLANS					■
A-401.00	INTR ELEVATIONS	■	■	■	■	
A-411.00	STORAGE CLOSET INTR ELEVATIONS					■
A-501.00	ACCESSIBLITY DETAILS		■	■	■	
A-502.00	ACCESSIBLITY DETAILS		■	■	■	
A-503.00	WALL DTLS		■	■	■	

GREG KORN AIA ARCHITECTS

INTERIOR ALTERATION

2525 MOORPARK RD
THOUSAND OAKS, CA 91362

Client
Andrew Mooney, Park Planner
CONEJO RECREATION & PARK DISTRICT
403 W. Hillcrest Drive
Thousand Oaks CA 91360
(805) 495-6471
amooney@crpd.org

Architect
G. Ian Korn, AIA
GKA Architects
351 Rolling Oaks Dr Ste 202
Thousand Oaks, CA 91361
gkorn@gka-arc.com
(805) 370-1300

MEP Engineer
Arash Nazari, PE
A&N Design Group Inc
21550 Oxnard Street #300
Woodland Hills, CA 91367
818-288-4361
arash@an-dg.com

Plan Examiner
TBD
City of Thousand Oaks
Building Division
2100 E Thousand Oaks Blvd
Thousand Oaks, CA 91361
(805) 449-2100

No.	Description	Date
1	Schematic Design to Client	08.07.19
2	Schematic Design to Client- Storage	08.27.19
3	Building Dept Submittal	09.23.19
4	Building Dept Corrections	10.25.19
5	Public Works Corrections	11.07.19
6	CDs to Client-Storage	01.13.20
7	CDs to Client-Storage Rev	01.21.20

Project number	2019003
Date	01.21.20
Drawn by	GK
Checked by	GK

Drawing Name
COVER SHEET

Drawing No.
G-001.00

NOTE: DO NOT SCALE DRAWING
Scale AS NOTED

[FLS] FIRE, LIFE AND SAFETY

1. FIRE RATING INDICATION ON A WALL SHALL MEAN THAT THE ENTIRE LENGTH AND HEIGHT OF THE WALL TO THE UNDERSIDE OF THE ROOF STRUCTURE AND/OR EXTENDED PARAPETS SHALL BE FIRE RATED. ANY PENETRATIONS SHALL BE FIRE RATED/SEALED AS PER CODE REQUIREMENTS.
2. ALL WALLS HAVING A FIRE RATED AND SMOKE STOP DOOR SHOULD BE SMOKE SEALED THROUGHOUT FULL LENGTH AND HEIGHT TO UNDERSIDE OF STRUCTURE. ALL PENETRATIONS THROUGH THESE WALLS ABOVE AND BELOW CEILING SHALL BE TREATED TO MAINTAIN THE FIRE RATING INTEGRITY IDENTIFIED BY THE DOOR FIRE RESISTANCE RATING.
3. INDICATION OF "FIRE RATED ROOM" MEANS THAT ALL THE ROOM'S WALLS, DOORS, WINDOWS, OR ANY PENETRATIONS ABOVE OR BELOW THE FALSE CEILING (IF EXISTING) SHALL BE PROPERLY FIRE RATED AND SEALED.
4. FIRE RATED ASSEMBLIES: WHERE THE WORK OF THIS SECTION IS A COMPONENT OF ASSEMBLIES INDICATED TO BE FIRE-RATED, INCLUDING THOSE REQUIRED FOR COMPLIANCE WITH GOVERNING REGULATIONS, PROVIDE UNITS APPROVED BY GOVERNING AUTHORITIES HAVING JURISDICTION.
5. MEANS OF EGRESS ILLUMINATION: ANY TIME THE BUILDING IS OCCUPIED, THE MEANS OF EGRESS SHALL BE ILLUMINATED AT AN INTENSITY OF NOT LESS THAN 1 FOOT CANDLE AT THE WALKING SURFACE. LIGHTING SHALL BE POWERED BY PREMISES' ELECTRICAL SUPPLY. IN THE EVENT OF POWER SUPPLY FAILURE ILLUMINATION SHALL BE AUTOMATICALLY POWERED FROM AN EMERGENCY SYSTEM.
6. PROVIDE EXIT SIGNS THROUGHOUT THE ENTIRE PROJECT. THE EXIT SIGNS ALONG THE PATH OF TRAVEL SHALL BE LOCATED SO THEY ARE READILY VISIBLE FROM ANY DIRECTION OF APPROACH. EXIT SIGNS SHALL BE LOCATED AS NECESSARY TO CLEARLY INDICATE THE DIRECTION OF EGRESS TRAVEL (GRAPHICS SHALL INDICATE DIRECTION OF EGRESS) NO POINT SHALL BE MORE THAN 100 FEET FROM THE NEAREST VISIBLE SIGN. LOCATED EXIT SIGNS PER PLAN AND INSTALL ADDITIONAL SIGNS PER THE AUTHORITY HAVING JURISDICTION.
7. EXIT SIGNS SHALL BE INTERNALLY OR EXTERNALLY ILLUMINATED AT ALL TIMES. ELECTRONICALLY POWERED, SELF-LIMIOUS AND PHOTOLUMINESCENCE EXIT SIGNS SHALL COMPLY WITH UL 924 AND INSTALLED PER MANUFACTURE'S INSTRUCTIONS AND CURRENT BUILDING CODE. WHEN THE FACE OF AN EXIT SIGN IS ILLUMINATED FROM AN EXTERNAL SOURCE, IT SHALL HAVE AN INTENSITY OF NOT LESS THAN 5 FOOT CANDLES (54 LUX).
8. EXTINGUISHER LOCATIONS SHOWN ON PLANS ARE AN ESTIMATION. THE EXACT NUMBER, LOCATION AND TYPE OF EXTINGUISHER SHALL BE DETERMINED BY LOCAL FIRE AUTHORITY HAVING JURISDICTION. FIRE EXTINGUISHERS SHALL HAVE A MINIMUM RATING OF 2-A:10-B:C. THEY SHALL BE INSTALLED THROUGH OUT THE BUILDING, DO THAT THERE IS AN AVAILABLE EXTINGUISHER WITHIN 75 FEET OF TRAVEL FROM ANY POINT OF THE BUILDING AND/OR NO LESS THAN ONE EXTINGUISHER PER 3,000 SQUARE FEET.
9. THE MAXIMUM FLAME SPREAD CLASSIFICATION OF FINISH MATERIAL USED ON INTERIOR WALLS AND CEILINGS SHALL NOT EXCEED THAT SET FORTH IN THE CURRENT BUILDING CODE, FLAME SPREAD PROVISIONS.
10. PROVIDE FIRE STOPPING TO CUT OFF ALL CONCEALED DRAFT OPENINGS (BOTH VERTICAL AND HORIZONTAL) AT 10' 0" O.C. EACH WAY.
11. FOR EACH BUILDING SPACE PROVIDE 4" HIGH ADDRESS NUMBERS, REVERSE READING, CONTRASTING COLOR, SIMILAR TO LETTERSET "FUTURA BOLD." MOUNT DIRECTLY ABOVE ENTRANCE DOORS OR CONSPICUOUS LOCATION SO THEY ARE VISIBLE FROM THE STREET. PROVIDE FRONT READING AT REAR DOORS. FOR EACH MAJOR TENANT PROVIDE 12" HIGH, 3/4" THICK, INTEGRALLY COLORED ACRYLIC NUMBERS. VERIFY SIZE AND LOCATION WITH FIRE DEPARTMENT.
12. APPROVED ADDRESS NUMBERS SHALL BE PLACED ON ALL BUILDINGS IN SUCH A POSITION AS TO BE PLAINLY VISIBLE AND LEGIBLE FROM THE ROAD OR STREET FRONTING THE PROPERTY. PROVIDE ACKNOWLEDGEMENT OF THESE REQUIREMENTS.
13. PROVIDE A COMPLETE SUPERVISED AUTOMATIC FIRE SPRINKLER SYSTEM IN STRICT ACCORDANCE WITH THE FIRE DEPARTMENT REGULATIONS. SUBMIT PLANS BY A LICENSED FIRE SPRINKLER CONTRACTOR DIRECTLY TO THE FIRE DEPARTMENT, BUILDING DEPARTMENT AND LANDLORD'S INSURANCE COMPANY FOR REVIEW AND APPROVAL. SUBMIT SHOP DRAWINGS TO THE ARCHITECT PRIOR TO INSTALLATION, WITH ALL APPROVALS STAMPED THEREON. DEFERRED AGREEMENT UNDER SEPARATE SUBMITTAL.
14. ALL EXIT DOORS SHALL BE OPENABLE FROM THE INSIDE WITHOUT THE USE OF A KEY OR ANY SPECIAL KNOWLEDGE OR EFFORT. ONLY THE MAIN EXIT DOOR MAY HAVE KEY OPERATED HARDWARE AND SHALL BE LABELED "THIS DOOR TO REMAIN UNLOCKED DURING BUSINESS HOURS" IN BLOCK LETTERS A MINIMUM OF 1" HIGH ON CONTRASTING BACKGROUND. EFFORT TO OPERATE INTERIOR AND EXTERIOR DOORS IS NOT TO EXCEED 5 LBS. AND 15 LBS. FOR FIRE RATED DOORS.
15. WITHIN A STRUCTURE MAINTAIN AISLES LEADING TO REQUIRED EXITS CONTINUOUSLY TO A PUBLIC WAY OR APPROVED REFUGE AREA.
16. MAINTAIN A EXTERIOR WALKWAYS WITH A MINIMUM WIDTH OF 48" TO A PUBLIC WAY.
17. ONE-HOUR FIRE RATED CORRIDORS SHALL HAVE DOOR OPENINGS PROTECTED BY TIGHT-FITTING SMOKE AND DRAFT CONTROL ASSEMBLIES WITH A 20 MINUTE LABEL. DOORS SHALL BE MAINTAINED SELF-CLOSING. DOORS SHALL BE GASKETED TO PROVIDE A SMOKE AND DRAFT SEAL.
18. PROVIDE FIRE DAMPERS WHERE DUCTWORK PENETRATES A FIRE RATED WALL OR CEILING ASSEMBLY.
19. PRIOR TO DELIVERY OF COMBUSTIBLE BUILDING MATERIAL TO THE PROJECT SITE, THE SITE WATER SYSTEM SHALL PASS ALL REQUIRED TESTS AND BE CONNECTED TO THE PUBLIC WATER SUPPLY SYSTEM. IN ADDITION, AN APPROVED ALL WEATHER ROAD SHALL BE IN PLACE TO PROVIDE ADEQUATE AND PERMANENT ACCESS FOR EMERGENCY VEHICLES.
20. MAINTAIN GOOD HOUSEKEEPING AT ALL TIMES. ACCUMULATION OF COMBUSTIBLE WASTE MATERIALS IN THE BUILDING IS NOT ALLOWED.
21. PROTECT ABOVE GROUND GAS METERS, REGULATORS, SWITCHGEAR AND PIPING EXPOSED TO VEHICULAR TRAFFIC IN AN APPROVED MANNER.
22. ALL INSULATION MATERIAL, INCLUDING FACINGS, SUCH AS VAPOR BARRIERS OR BREATHER PAPERS INSTALLED WITHIN FLOOR-CEILING ASSEMBLIES, ROOF-CEILING ASSEMBLIES, WALLS, CRAWL SPACES OR ATTICS SHALL HAVE A FLAME-SPREAD RATING NOT TO EXCEED 25 AND A SMOKE DENSITY NOT THE EXCEED 450.
23. FIRE ALARM PLANS SHALL BE SUBMITTED. PLANS SHALL BE DESIGNED BY A QUALIFIED PERSON, AND REVIEWED BY A REGISTERED FIRE PROTECTION ENGINEER AND/OR ELECTRICAL ENGINEER WITH REVIEW COMMENTS SUBMITTED. DEFERRED SUBMITTAL OF DESIGN DOCUMENTATION PRIOR TO INSTALLATION OF ANY COMPONENTS IS ACCEPTABLE. PLEASE PROVIDE PLANS IN ELECTRONIC FORM. PLEASE PROVIDE ACKNOWLEDGEMENT OF THESE REQUIREMENTS.
24. FIRE SPRINKLER SYSTEM PLANS ARE REQUIRED. AN APPROVED SPRINKLER SYSTEM SHALL BE INSTALLED IN ACCORDANCE WITH NFPA 13. PLANS SHALL BE DESIGNED BY A STATE CERTIFIED DESIGNER AND BEAR THE STAMP OF THE DESIGNER. CALCULATIONS ARE REQUIRED FOR ALL INSTALLATIONS. DEFERRED SUBMITTAL OF DESIGN DOCUMENTATION PRIOR TO INSTALLATION OF ANY COMPONENTS IS ACCEPTABLE. LOCKING FIRE DEPARTMENT CONNECTION CAPS ARE REQUIRED FOR THE WATER-BASED FIRE PROTECTION SYSTEMS. THE FIRE DEPARTMENT REQUIRES KNOX-BOX BRAND FDC CAPS AND PLUGS. REMOTE FDC'S SHALL BE PAINTED RED WITH AN EXTERIOR PAINT. WWW.KNOXBOX.COM. PROVIDE ACKNOWLEDGEMENT OF THESE REQUIREMENTS.
25. OCCUPANT LOAD SIGNS SHALL BE POSTED IN ASSEMBLY AREAS. EVERY ROOM OR SPACE THAT IS ASSEMBLY OCCUPANCY SHALL HAVE THE OCCUPANT LOAD SIGN OF THE ROOM OR SPACE POSTED IN A CONSPICUOUS PLACE, NEAR THE MAIN EXIT OR EXIT ACCESS DOORWAY FROM THE ROOM OR SPACE. POSTED SIGNS SHALL BE APPROVED LEGIBLE PERMANENT DESIGN AND BE MAINTAINED BY THE OWNER OR AUTHORIZED AGENT. PROVIDE ACKNOWLEDGEMENT OF THESE REQUIREMENTS.
26. A KNOX BRAND SECURITY KEY BOX SHALL BE PROVIDED. CONTACT THE KNOX COMPANY AT WWW.KNOXBOX.COM OR 866-625-4563 TO ORDER. THE KEY BOX SHALL BE INSTALLED AT A LOCATION APPROVED BY THIS DEPARTMENT. THIS IS GENERALLY TO THE RIGHT OF THE MAIN ENTRY, SIX (6) FEET ABOVE THE FINISHED GRADE. A VISUAL STROBE IS REQUIRED ABOVE THE KNOX BOX. ORDER AT LEAST TWO WEEKS BEFORE APPROVAL OF ALARM AND/OR SPRINKLER SYSTEMS ACCEPTANCE TESTING. PROVIDE PROPOSED LOCATIONS OF REQUIRED HARDWARE. ONLY ONE KNOX BOX WILL BE REQUIRED.
27. FIRE EXTINGUISHING EQUIPMENT FOR KITCHEN GREASE HOODS AND DUCTS SHALL BE INSTALLED IN ACCORDANCE WITH CURRENT BUILDING CODE. PLANS AND SPECIFICATIONS SHALL BE SUBMITTED FOR REVIEW. DEFERRED SUBMITTAL OF DESIGN DOCUMENTATION PRIOR TO INSTALLATION OF ANY COMPONENTS IS ACCEPTABLE. PROVIDE ACKNOWLEDGEMENT OF THESE REQUIREMENTS.
28. COMMERCIAL COOKING EQUIPMENT. EXTINGUISHER SHALL BE PROVIDED WITHIN 30 FEET OF THE COOKING EQUIPMENT AND A CLASS K SHALL BE AVAILABLE TO PROTECT EQUIPMENT USING VEGETABLE OR ANIMAL FAT. FOR OTHER COOKING EQUIPMENT A MINIMUM 4-A:40B:C SHOULD BE PROVIDED, NFPA 10. CLASS K EXTINGUISHER: ONE 1.5 GALLON EXTINGUISHER FOR UP TO FOUR DEEP FAT FRYERS AND ONE ADDITIONAL EXTINGUISHER FOR EVERY ADDITIONAL GROUP OF FOUR FRYERS. FOR FRYERS EXCEEDING 6 SQ. FT. PROVIDED AN EXTINGUISHER PER THE MANUFACTURER'S RECOMMENDATIONS.
29. SIGNAGE IS REQUIRED FOR THE FIRE RISER, FACP, AND ELECTRICAL ROOM.

[SHD] SHOP DRAWINGS

1. THE CONTRACTOR SHALL REVIEW ALL SHOP DRAWINGS PRIOR TO SUBMISSION TO THE ARCHITECT AND ENGINEER. THE CONTRACTOR REPRESENTS BY THIS REVIEW: THAT THE CONTRACTOR HAS DETERMINED AND VERIFIED ALL FIELD MEASUREMENTS, FIELD CONSTRUCTION CONDITIONS, PRODUCT REQUIREMENTS; CATALOGUE NUMBERS; AND SIMILAR DATA; AND THAT THE FOLLOWING:
1A. CONTRACTOR HAS CHECKED AND COORDINATED EACH SHOP DRAWING WITH THE REQUIREMENTS OF THE WORK AND OF THE CONTRACT DOCUMENTS. THE CONTRACTOR SHALL CONFIRM THIS REVIEW AND APPROVAL OF EACH SHOP DRAWING BY STAMP, DATE, AND SIGNATURE OF THE PERSON RESPONSIBLE. THE ENGINEER WILL REJECT WITHOUT REVIEW, ANY AND ALL SHOP DRAWINGS NOT STAMPED, SIGNED AND APPROVED MAY REQUIRE THEM TO BE RESUBMITTED.
1B. AT THE TIME OF EACH SUBMISSION, THE CONTRACTOR SHALL NOTIFY THE ENGINEER AND ARCHITECT IN WRITING OF ANY DEVIATIONS IN THE SHOP DRAWINGS FROM THE REQUIREMENTS OF THE CONTRACT DOCUMENTS. A GENERAL STATEMENT TO THE EFFECT THAT THERE ARE OR MAY BE DEVIATIONS WILL NOT BE REGARDED AS NOTIFICATION OF DEVIATIONS. CHANGES TO THE WORK SHALL NOT BE MADE THROUGH THE PROCESS OF REVIEWING SHOP DRAWINGS.
2. THE CONTRACTOR SHALL SUBMIT SHOP DRAWINGS TO THE ENGINEER AND ARCHITECT IN AN ORDERLY SEQUENCE AND SUFFICIENTLY IN ADVANCE TO PREVENT ANY DELAYS TO THE WORK OR TO THE WORK OF OTHER CONTRACTORS. UPON REQUEST OF THE CONTRACTOR OR THE ENGINEER, THEY JOINTLY SHALL PREPARE A SCHEDULE OF THE DATES FOR SUBMISSION AND RETURN OF SHOP DRAWINGS. ALLOW TIME FOR RE-SUBMISSIONS OF SHOP DRAWINGS. SHOP DRAWINGS, WHICH REQUIRE APPROVAL OF ANY LEGALLY CONSTITUTED AUTHORITY HAVING JURISDICTION SHALL BE SUBMITTED TO SUCH AUTHORITY BY THE CONTRACTOR.
3. THE CONTRACTOR SHALL SUBMIT SHOP DRAWINGS IN THE FORM SPECIFIED OR AS THE ARCHITECT AND ENGINEER MAY DIRECT. THE ENGINEER WILL REVIEW AND RETURN SHOP DRAWINGS IN ACCORDANCE WITH THE SCHEDULE AGREED UPON, OR OTHERWISE WITH REASONABLE PROMPTNESS. THE ARCHITECT AND ENGINEER'S REVIEW IS FOR CONFORMITY TO THE DESIGN CONCEPT AND FOR GENERAL ARRANGEMENT ONLY. THE ARCHITECT AND ENGINEER'S REVIEW SHALL NOT RELIEVE THE CONTRACTOR OF RESPONSIBILITY FOR ERRORS OR OMISSIONS IN THE SHOP DRAWINGS OR FOR MEETING ALL REQUIREMENTS OF THE CONTRACT DOCUMENTS.
4. UPON THE ARCHITECT AND ENGINEER'S REQUEST, THE CONTRACTOR SHALL REVISE AND RESUBMIT SHOP DRAWINGS, WHICH THE ARCHITECT AND ENGINEER REJECTS AS INCONSISTENT WITH THE CONTRACT DOCUMENTS. THE CONTRACTOR SHALL NOTIFY THE ARCHITECT AND ENGINEER IN WRITING OF ANY REVISIONS TO THE RESUBMISSION OTHER THAN THOSE REQUESTED BY THE ENGINEER. A GENERAL STATEMENT TO THE EFFECT THAT THERE ARE OR MAY BE DEVIATIONS WILL NOT BE CONSIDERED AS NOTICE.
5. WHEN TECHNICAL BROCHURES, CATALOGUE CUTS, SCHEDULES AND PERFORMANCE CHARTS ARE PROVIDED AS SHOP DRAWINGS, THE CONTRACTOR SHALL CROSS OUT ALL NON-RELEVANT DATA PRIOR TO PASSING THEM ON TO THE ARCHITECT AND ENGINEER.
6. IF THE ARCHITECT AND ENGINEER REQUESTS DETAILS OF ITEMS ON SHOP DRAWINGS WHICH THE CONTRACTOR BELIEVES ARE SCOPE CHANGES OR REQUIRE AN EXTENSION TO CONTRACT TIME, THE CONTRACTOR SHALL NOTIFY THE EMPLOYER AND THE ENGINEER FORTHWITH AND RECEIVE ACCEPTANCE BY THE EMPLOYER BY WAY OF WRITTEN INSTRUCTION PRIOR TO PROCEEDING WITH FABRICATION.
7. THE CONTRACTOR SHALL PROVIDE THE ADEQUATE COORDINATION OF MATERIALS, SYSTEM AND SERVICES AND SUBMIT COORDINATED SHOP DRAWINGS FOR THE ARCHITECT AND/OR ENGINEER'S REVIEW WHEN REQUIRED.
8. SHOP DRAWINGS BY TRADE AS APPLICABLE TO THIS PROJECT AND SPECIFIED ON THE DRAWINGS:
A. SUBMIT LARGE SCALE, DIMENSIONED DRAWINGS SHOWING PROFILES, MATERIALS, MEMBER SIZES, DIMENSIONS AND HARDWARE.
B. INCLUDE PLANS, ELEVATIONS, SECTIONS, AND DETAILS OF ALL FABRICATIONS AND THEIR CONNECTIONS. SHOW ANCHORAGE AND ACCESSORY ITEMS. NO FABRICATION OR INSTALLATION IS TO BE DONE WITHOUT SHOP DRAWINGS REVIEW AND COMMENT.
C. SHOW REQUIRED FIELD MEASUREMENTS AND INTERFACE WITH WORK OF OTHER TRADES.
D. SHOW SECTION PROFILES, TRIM, SIZES, AND MATERIAL THICKNESS/GAGE.
E. SHOW CONNECTIONS TO ADJACENT CONSTRUCTION. FURNISH ISOMETRIC DRAWINGS FOR CONDITIONS TOO DIFFICULT TO ILLUSTRATE IN 2 DIMENSIONS.
F. COORDINATE THE SHOP DRAWINGS WITH THE WORK OF OTHER TRADES THAT ARE PART OF, OR WILL BE INCORPORATED INTO THE WORK OF THIS PROJECT. INDICATE WORK TO BE PERFORMED BY OTHER TRADES, INCLUDING ADJACENT AND ABUTTING SYSTEM, ASSEMBLY AND MATERIALS TO WHICH THIS WORK IS TO BE SECURED.
G. INDICATE ALLOWABLE STRUCTURAL DESIGN LOADING FOR SPECIFIC PRODUCT COMPONENTS TO MEET DESIGN CRITERIA AND/OR MINIMUM CODE REQUIREMENTS.
H. INDICATE TYPE, SIZE, MATERIAL, FINISH, DESIGN VALUES, ORIENTATION, AND LOCATION OF DIFFERENT PRODUCT COMPONENTS.
I. PRODUCE SHOP DRAWINGS FOR ALL CUSTOM FABRICATED ITEMS.

[QAC] QUALITY ASSURANCE AND CONTROL

1. THE CONTRACTOR SHALL ENSURE THAT QUALITY ASSURANCE AND QUALITY CONTROL ACTIVITIES ARE MAINTAINED TO MEET THE OWNER'S GOALS AND FINAL PRODUCT EXPECTATIONS AND SATISFACTION. THE CONTRACTOR SHALL IMPLEMENT THE PROGRAM SO THAT THE WORK IS DESIGNED AND CONSTRUCTED IN ACCORDANCE WITH THE REQUIREMENTS OF THE CONTRACT DOCUMENTS.
2. ALL GENERAL NOTES AND STANDARD DETAILS ARE THE MINIMUM REQUIREMENTS TO BE USED IN CONDITIONS WHICH ARE NOT SPECIFICALLY SHOWN OTHERWISE.
3. ALL MANUFACTURERS REFERRED TO IN THE MATERIAL SELECTION ARE PROVIDED TO ESTABLISH A MINIMUM LEVEL OF QUALITY REQUIRED FOR THE PROJECT. CONTRACTOR TO PROVIDE THE SAME OR APPROVED EQUAL WHERE NOTED.
4. ENGINEERING:
A. DESIGN DRAWINGS INDICATE DESIRED, DESIGN INTENT AND SPECIFY THE MINIMUM DESIGN CRITERIA.
5. FABRICATOR/INSTALLER QUALIFICATIONS: DOCUMENTED EXPERIENCE IN FABRICATION AND INSTALLATION OF SYSTEMS AND MATERIALS INDICATED FOR THIS PROJECT, AND WITH A RECORD OF SUCCESSFUL IN-SERVICE PERFORMANCE.
6. WELDER QUALIFICATIONS: CERTIFIED AND QUALIFIED IN ACCORDANCE WITH PROCEDURES SPECIFIED IN AMERICAN WELDING SOCIETY STANDARD IN ACCORDANCE WITH AWS D1.1, USING PROCEDURES, MATERIALS, AND EQUIPMENT OF THE TYPE REQUIRED FOR THE WORK.
7. UNIFORMITY: OBTAIN ALL MATERIALS AND PRODUCTS USED FOR THE PROJECT FROM THE SAME MANUFACTURER.
8. INSTALL IN ACCORDANCE WITH THE CONTRACT DRAWINGS, THE MANUFACTURER'S RECOMMENDATIONS, THE REQUIREMENTS OF THE AUTHORITIES HAVING JURISDICTION AND THE FOLLOWING.
A. STRUCTURAL FRAMING AND ACCESSORIES WHERE REQUIRED.
B. MANUFACTURER'S SPECIFICATIONS AND INSTALLATION INSTRUCTIONS FOR MANUFACTURED PRODUCTS TO BE USED IN THE FABRICATION OF WORK.

[OCC] TENANT / OCCUPANT PROTECTION NOTES

FOR INTERIOR WORK WHERE PORTIONS OF BUILDING ARE OCCUPIED DURING CONSTRUCTION:
1. EGRESS. AT ALL TIMES IN THE COURSE OF CONSTRUCTION PROVISION SHALL BE MADE FOR ADEQUATE EGRESS AS REQUIRED BY THE CODE. REQUIRED EGRESS SHALL NOT BE OBSTRUCTED AT ANY TIME EXCEPT WHERE APPROVED BY THE AUTHORITIES .
2. FIRE SAFETY. ALL NECESSARY LAWS AND CONTROLS, AS WELL AS ADDITIONAL SAFETY MEASURES NECESSITATED BY THE CONSTRUCTION SHALL BE STRICTLY OBSERVED.
3. HEALTH REQUIREMENTS. SPECIFICATION OF METHODS TO BE USED FOR CONTROL OF DUST, DISPOSAL OF CONSTRUCTION DEBRIS, PEST CONTROL AND MAINTENANCE OF SANITARY FACILITIES, AND LIMITATION OF NOISE TO ACCEPTABLE LEVELS SHALL BE INCLUDED.
3.1. THERE SHALL BE INCLUDED A STATEMENT OF COMPLIANCE WITH APPLICABLE PROVISIONS OF LAW RELATING TO LEAD AND ASBESTOS.
4. STRUCTURAL SAFETY. NO STRUCTURAL WORK SHALL ENDANGER THE OCCUPANTS.
5. NOISE RESTRICTIONS. WHERE HOURS OF THE DAY OR THE DAYS OF THE WEEK IN WHICH CONSTRUCTION WORK MAY BE UNDERTAKEN ARE LIMITED PURSUANT TO THE CODE, SUCH LIMITATIONS SHALL BE STATED.
6. SEE ADDITIONAL TENANT PROTECTION NOTES AS APPLIES ON COVER SHEET

[MKP] MOCKUPS

1. FIRST INSTALLED AREA OR EXAMPLE OF EACH TYPE OR CONFIGURATION OF FINISH, ASSEMBLY OR INSTALLATION CONDITION, SHALL SERVE AS A MOCKUP FOR REVIEW AND APPROVAL BY OWNER AND/OR ARCHITECT OF QUALITY, VISUAL EFFECT, AND INTERFACE WITH ADJACENT CONSTRUCTION.
2. PROVIDE A FULL-SIZE MOCKUPS PER OWNER AND/OR ARCHITECTS INSTRUCTIONS.
3. EACH MOCK-UP SHALL CONSIST OF A TYPICAL ASSEMBLY, SPECIFIED FINISH, MOUNTING METHOD, AND SHALL BE SUFFICIENTLY LARGE AND COMPLETE TO DEMONSTRATE INSTALLATION AND AESTHETIC EFFECT OF COMPLETED ASSEMBLY.
4. IF REQUESTED BY ARCHITECT: INSTALL MOCKUP AT A LOCATION SELECTED. MAKE MODIFICATIONS TO MOCKUPS WITHOUT ADDITIONAL CHARGE TO OWNER.

[ARC] THE ARCHITECTURAL DRAWINGS AND SPECIFICATIONS

THESE ARCHITECTURAL DRAWINGS AND SPECIFICATIONS, INCLUDING DRAWINGS PREFIXED WITH "G" FOR GENERAL AND "A" FOR ARCHITECTURAL, AND ALL ARCHITECTURAL SPECIFICATIONS PROVIDED THEREIN, ARE THE INSTRUMENTS OF SERVICE OF THE ARCHITECT. THEY REMAIN THE PROPERTY OF ARCHITECT AND ARE PROTECTED UNDER COMMON LAW COPYRIGHT PROVISIONS. THEY ARE NOT TO BE REUSED EXCEPT BY WRITTEN AGREEMENT AND WITH THE AGREED COMPENSATION TO THE ARCHITECT. IF REUSED WITHOUT PERMISSION, THE ARCHITECT SHALL BE INDEMNIFIED AND HELD HARMLESS FROM ALL LIABILITY, LEGAL EXPOSURE, CLAIMS, DAMAGES, LOSSES AND EXPENSES. DRAWINGS SHALL NOT BE USED FOR ISSUANCE OF A BUILDING PERMIT UNLESS SIGNED AND SEALED BY THE ARCHITECT. ARCHITECTURAL DRAWINGS SHALL NOT BE USED FOR MULTIPLE OR PROTOTYPE DEVELOPMENT WITHOUT WRITTEN AUTHORIZATION FROM THE ARCHITECT. FOLLOWING APPROVAL OF THE DRAWINGS BY THE BUILDING DEPARTMENT, THE ARCHITECTURAL DRAWINGS AND SPECIFICATIONS SHALL BE ISSUED TO THE BIDDING CONTRACTORS FOR HARD BIDS, AND SUBSEQUENTLY UPON CLARIFICATIONS AND AWARD OF THE CONTRACT TO THE WINNING BID CONTRACTOR, THE ARCHITECTURAL DRAWINGS AND SPECIFICATIONS SHALL BE ISSUED TO SAID CONTRACTOR FOR CONSTRUCTION OF THE BUILDING. ONLY AT THAT POINT SHALL THE WORDS "NOT FOR CONSTRUCTION" BE REMOVED FROM THE TITLE BLOCK OF THESE DRAWINGS.

THE ARCHITECT SHALL NOT BE RESPONSIBLE WHERE CONSTRUCTION DEVIATES FROM THESE ARCHITECTURAL DRAWINGS AND SPECIFICATIONS.

CHANGES TO THE ARCHITECTURAL DRAWINGS AND SPECICATIONS BY THE OWNER, CONTRACTOR, OR ANY PARTY OTHER THAN THE ARCHITECT, AFTER THE ARCHITECT HAS ISSUED THE ARCHITECTURAL DRAWINGS AND SPECIFICATIONS TO THE WINNING-BID CONTRACTOR, ARE FORBIDDEN AND IF PERFORMED SHALL BE THE SOLE RESPONSIBILITY OF THE PERSONS MAKING SUCH CHANGES. THE ARCHITECT SHALL BE INDEMNIFIED AND HELD HARMLESS FROM ALL LIABILITY, LEGAL EXPOSURE, CLAIMS, DAMAGES, LOSSES AND EXPENSES RESULTING FROM SUCH CHANGES. THE OWNER AND/ OR CONTRACTOR SHALL HOLD THE ARCHITECT HARMLESS FROM AND AGAINST ALL CLAIMS, DAMAGES, LOSSES AND EXPENSES INCLUDING, BUT NOT LIMITED TO, ATTORNEY'S FEES ARISING OUT OF OR RESULTING FROM THE PERFORMANCE OF THE WORK BY THE CONTRACTOR. THE ARCHITECT SHALL NOT HAVE CONTROL OR CHANGE OF AND SHALL NOT BE RESPONSIBLE FOR CONSTRUCTION MEANS, METHODS, TECHNIQUES, SEQUENCES, OR PROCEDURES, FOR SAFETY PRECAUTIONS AND PROGRAMS IN CONNECTION WITH THE WORK, FOR THE ACTS OR OMISSIONS OF THE CONTRACTOR, SUBCONTRACTOR, FOR ANY OTHER PERSONS PERFORMING ANY OF THE WORK, OR FOR THE FAILURE OF ANY OF THEM TO CARRY OUT THE WORK IN ACCORDANCE WITH THE CONTRACT DOCUMENTS.

THE LATEST EDITION OF AIA DOCUMENTS A101-A107, "Standard Form of Agreement Between Owner and Contractor ," AS APPROPRIATE FOR THE PROJECT, SHALL BE USED IN THE CONTRACT BETWEEN OWNER AND CONTRACTOR. IF ANOTHER FORM OF AGREEMENT IS USED, THE ARCHITECT SHALL BE INFORMED BY THE OWNER AND CONTRACTOR AS TO THE FORM OF AGREEMENT PRIOR TO SIGNING OF THE AGREEMENT. THE LATEST EDITION OF AIA DOCUMENT A201, "General Conditions of the Contract for Construction", SHALL BE INCORPORATED AS A PART OF THE CONTRACT DOCUMENTS, IN ADDITION TO THE DRAWINGS AND SPECIFICATIONS. CONTRACTOR SHALL ALSO REVIEW THE OWNER-ARCHITECT AGREEMENT, AIA DOCUMENT B101-B107, AS APPROPRIATE FOR THE PROJECT, TO BECOME FAMILIAR WITH THE RESPONSIBILITIES OF THE ARCHITECT. UPON ARCHITECT REQUEST, THE OWNER AND/OR CONTRACTOR SHALL PROVIDE THE ARCHITECT WILL A COMPLETE COPY OF THE EXECUTED AGREEMENT BETWEEN OWNER AND CONTRACTOR.

[GEN] GENERAL NOTES

1. THE FOLLOWING NOTES SPECIFY THE GENERAL STANDARDS AND REQUIREMENTS FOR INSTALLATION AND MATERIALS OF WORK AS APPLICABLE IN THE SCOPE OF WORK. REFER TO CONSTRUCTION DOCUMENTS OF OTHER APPLICABLE DISCIPLINES, INCLUDING AND NOT LIMITING TO CIVIL, STRUCTURAL, MECHANICAL, PLUMBING, ELECTRICAL, LANDSCAPE FOR SPECIFIC REQUIREMENTS AND STANDARDS FOR THE PROJECT.
2. GENERAL NOTES ARE TYPICAL FOR ALL, THROUGHOUT THE ENTIRE PROJECT.
3. ALL MATERIALS AND CONSTRUCTION SHALL BE IN CONFORMANCE WITH THE LATEST EDITION OF BUILDING CODES AS ADOPTED BY AUTHORITIES HAVING JURISDICTION AND ALL OTHER LOCAL, STATE AND FEDERAL REGULATIONS AND REQUIREMENTS. GENERAL NOTES SHALL BE CONSIDERED A PART OF THE WRITTEN CONTRACT.
4. THE CONTRACTOR SHALL BE RESPONSIBLE FOR NOTIFYING ARCHITECT/ENGINEER OF ANY OMISSIONS, OR DISCREPANCIES AS THEY MAY BE DISCOVERED IN THE PLANS, SCHEDULES, SPECIFICATIONS & NOTES, AND REQUESTING INTERPRETATION, CLARIFICATION AND/OR DIRECTIONS FROM ARCHITECT/ENGINEER PRIOR TO ORDERING MATERIAL AND COMMENCING WORK, INCLUDING BUT NOT LIMITED BY DEMOLITION. THE CONTRACTOR SHALL BE RESPONSIBLE FOR CORRECTING ANY ERROR, OMISSION, OR INCONSISTENCY AFTER THE START OF CONSTRUCTION WHICH HAS NOT BEEN BROUGHT TO THE ATTENTION OF THE ARCHITECT/ENGINEER AND SHALL INCUR ANY EXPENSES TO RECTIFY THE SITUATION. THE METHOD OF CORRECTION SHALL BE APPROVED BY THE ARCHITECT/ENGINEER.
5. PRIOR TO STARTING CONSTRUCTION THE CONTRACTOR HAS THE RESPONSIBILITY TO LOCATE ALL EXISTING UTILITIES, WHETHER OR NOT SHOWN ON THE PLANS, AND TO PROTECT THEM FROM DAMAGE. THE CONTRACTOR OR SUBCONTRACTOR SHALL BEAR THE EXPENSE OF REPAIRING OR REPLACING ANY DAMAGE TO THE UTILITIES CAUSED DURING THE EXECUTION OF THE WORK. WHERE REQUIRED FOR THE PROPER EXECUTION OF THE WORK, UTILITIES SHALL BE RELOCATED AS DIRECTED BY ENGINEERS. EXTREME CAUTION SHOULD BE USED BY THE CONTRACTOR WHEN EXCAVATING OR PIER DRILLING AROUND OR NEAR UTILITIES. CONTRACTOR SHALL PROVIDE SAFETY TRAINING FOR THE WORKING CREW.
6. A COPY OF THE APPROVED PLANS SHALL BE KEPT IN A PLACE SPECIFIED BY THE GOVERNING AGENCY, AND BY LAW SHALL BE AVAILABLE FOR INSPECTION AT ALL TIMES. IT IS THE CONTRACTOR'S RESPONSIBILITY TO ENSURE ALL CONSTRUCTION SETS REFLECT THE SAME INFORMATION AS THE APPROVED PLANS. THE CONTRACTOR SHALL ALSO MAINTAIN ONE SET OF PLANS AT THE SITE FOR THE PURPOSE OF DOCUMENTING ALL AS-BUILT CHANGES, REVISIONS, ADDENDUMS, OR CHANGE ORDERS. THE CONTRACTOR SHALL FORWARD THE AS-BUILT/HIRED DRAWINGS TO THE ARCHITECT/ENGINEER AT THE CONCLUSION OF THE PROJECT.
7. THE CONTRACTOR SHALL BE RESPONSIBLE FOR THE COMPLETE SECURITY OF THE SITE WHILE THE WORK IS IN PROGRESS UNTIL THE JOB IS COMPLETE.
8. THE CONTRACTOR IS RESPONSIBLE TO PROVIDE TEMPORARY POWER, WATER, AND TOILET FACILITIES AS REQUIRED BY THE PROPERTY OWNER OR GOVERNING AGENCY.
9. THE CONTRACTOR SHALL BE RESPONSIBLE FOR COMPLYING WITH ALL SAFETY PRECAUTIONS AND REGULATIONS DURING THE WORK. THE ENGINEER WILL NOT ADVISE ON, NOR PROVIDE DIRECTION, AS TO SAFETY PRECAUTIONS AND PROGRAMS.
10. THE CONTRACTOR IS SOLELY RESPONSIBLE FOR ALL CONSTRUCTION MEANS, METHODS, TECHNIQUES, PROCEDURES AND SEQUENCING, AND COORDINATING ALL PORTIONS OF THE WORK UNDER THE PROJECT. THE CONTRACTOR IS RESPONSIBLE FOR FURNISHING ALL TEMPORARY BRACING AND/OR SUPPORT THAT MAY BE REQUIRED AS THE RESULT OF THE CONTRACTOR'S CONSTRUCTION METHODS. THE INVESTIGATION, DESIGN, SAFETY, ADEQUACY AND INSPECTION OF BRACING, SHORING, TEMPORARY SUPPORTS, ETC. IS THE SOLE RESPONSIBILITY OF THE CONTRACTOR.
11. THE CONTRACTOR SHALL BE RESPONSIBLE TO OBTAIN AND PAY FOR ALL PERMITS, LICENSES AND INSPECTIONS WITH RESPECT TO THE WORK TO COMPLETE THE PROJECT. BUILDING PERMIT APPLICATIONS SHALL BE FILED BY THE OWNER OR HIS REPRESENTATIVE. CONTRACTOR SHALL OBTAIN THE PERMIT AND MAKE FINAL PAYMENT OF SAID DOCUMENT(S).
12. THE CONTRACTOR IS RESPONSIBLE FOR LIMITING THE AMOUNT OF LOAD IMPOSED ON THE STRUCTURAL FRAMING AND STRUCTURE DURING CONSTRUCTION. CONSTRUCTION LOADS SHALL NOT EXCEED THE DESIGN CAPACITY OF THE FRAMING AT THE TIME THE LOADS ARE IMPOSED. TEMPORARY SHORING OR BRACING SHALL BE PROVIDED WHERE THE STRUCTURE OR SOIL HAS NOT ATTAINED THE DESIGN STRENGTH FOR THE CONDITIONS PRESENT. THE CONTRACTOR SHALL ALSO RECOGNIZE AND CONSIDER THE EFFECTS OF THERMAL MOVEMENTS OF STRUCTURAL ELEMENTS DURING THE CONSTRUCTION PERIOD.
13. ALL DIMENSIONS TAKE PRECEDENCE OVER SCALE UNLESS OTHERWISE NOTED.
14. THE CONTRACTOR SHALL PROVIDE ALL NECESSARY FRAMING, BACKING, HANGERS, BLOCKING OR SUPPORTS FOR INSTALLATION OF ITEMS INDICATED ON THE DRAWINGS.
15. THE CONTRACTOR SHALL PROVIDE FIRE MARSHALL APPROVED MATERIALS TO FILL/SEAL PENETRATIONS THROUGH FIRE RATED ASSEMBLIES.
16. NEW CONSTRUCTION ADDED TO EXISTING CONSTRUCTION SHALL BE MATCHED IN FORM, TEXTURE, MATERIAL AND PAINT COLOR EXCEPT AS NOTED IN THE PLANS.
17. WHERE SPECIFIED, MATERIALS TESTING SHALL BE TO THE LATEST STANDARDS AVAILABLE AS REQUIRED BY THE LOCAL GOVERNING AGENCY RESPONSIBLE FOR RECORDING THE RESULTS.
18. ALL DEBRIS AND REFUGE IS TO BE REMOVED FROM THE PROJECT. PREMISES SHALL BE LEFT IN A CLEAN BROOM FINISHED CONDITION AT ALL TIMES.
19. ALL SYMBOLS AND ABBREVIATIONS ARE CONSIDERED CONSTRUCTION INDUSTRY STANDARDS. IF A CONTRACTOR HAS A QUESTION REGARDING THEIR EXACT MEANING, THE ARCHITECT/ENGINEER SHALL BE NOTIFIED FOR CLARIFICATIONS.
20. CONTRACTORS SHALL VISIT THE SITE PRIOR TO BID TO ASCERTAIN CONDITIONS WHICH MAY ADVERSELY AFFECT THE WORK OR COST THEREOF.
21. THE CONTRACTOR SHALL FIELD VERIFY THE DIMENSIONS, ELEVATIONS, ETC. NECESSARY FOR THE PROPER CONSTRUCTION AND ALIGNMENT OF THE NEW PORTION OF THE WORK TO THE EXISTING CONDITION. THE CONTRACTOR SHALL MAKE ALL MEASUREMENTS NECESSARY FOR FABRICATION AND ERECTION OF STRUCTURAL MEMBERS. ANY DISCREPANCY SHALL BE IMMEDIATELY BROUGHT TO THE ATTENTION OF THE ARCHITECT/ENGINEER.
22. REPRESENTATIONS OF TRUE NORTH, OTHER THAN THOSE FOUND ON THE PLOT OF SURVEY DRAWING, SHALL NOT BE USED TO IDENTIFY OR ESTABLISH THE BEARING OF TRUE NORTH AT THE SITE. THE CONTRACTOR SHALL RELY SOLELY ON THE PLOT OF SURVEY DRAWING AND ANY SURVEYOR'S MARKINGS AT THE SITE FOR THE ESTABLISHMENT OF TRUE NORTH, AND SHALL NOTIFY THE ARCHITECT/ ENGINEER PRIOR TO PROCEEDING WITH THE WORK. IF ANY DISCREPANCY IS FOUND BETWEEN THE VARIOUS ELEMENTS OF THE WORKING DRAWINGS AND THE TRUE NORTH ORIENTATION AS DEPICTED ON THE CIVIL SURVEY, THE CONTRACTOR SHALL ASSUME SOLE LIABILITY FOR ANY FAILURE TO NOTIFY THE ARCHITECT/ENGINEER.
23. NO CHANGES ARE TO BE MADE TO THESE PLANS WITHOUT THE KNOWLEDGE AND WRITTEN CONSENT OF THE ARCHITECT/ ENGINEER. UNAUTHORIZED CHANGES RENDER THESE DRAWINGS VOID. THIS INCLUDES THAT THE CONTRACTOR SHALL NOT BE RELIEVED OF ANY DEVIATION FROM THE PLANS BY THE PROFESSIONAL'S OF RECORD REVIEW OF SHOP DRAWINGS, PRODUCT DATA, ETC. UNLESS THE CONTRACTOR HAS SPECIFICALLY INFORMED THE PROFESSIONAL OF RECORD OF SUCH DEVIATION IN WRITING AT THE TIME OF SUBMISSION, AND THE PROFESSIONAL OF RECORD HAS GIVEN WRITTEN APPROVAL TO THE SPECIFIC DEVIATION.
24. ANY REFERENCE TO THE WORDS "APPROVED" OR "APPROVAL" IN THESE DOCUMENTS SHALL BE HERE DEFINED TO MEAN GENERAL ACCEPTANCE OR REVIEW AND SHALL NOT RELIEVE THE CONTRACTOR AND/OR HIS SUB-CONTRACTORS OF ANY LIABILITY IN FURNISHING THE REQUIRED MATERIALS OR LABOR SPECIFIED.
25. ANY WORK INSTALLED IN CONFLICT WITH THE CONSTRUCTION DRAWINGS, WITHOUT THE PRIOR APPROVAL OF THE OWNER AND THE ARCHITECT SHALL BE CORRECTED AT THE CONTRACTORS EXPENSE.
26. WHEN PROPRIETARY ITEMS ARE SHOWN OR WHEN ITEMS ARE MANUFACTURED OFF SITE, MANUFACTURER'S DETAILS, EXECUTION, AND INSTALLATION INSTRUCTIONS SHALL BE FOLLOWED.
27. ANY DETAILS, SYSTEMS, MATERIALS, IE. , ARCHITECTURAL, STRUCTURAL, MECHANICAL, ETC., WHICH THE CONTRACTOR PROPOSES TO CHANGE, MUST FIRST BE REVIEWED BY THE ARCHITECT, ENGINEER, AND OWNER PRIOR TO THE PREPARATION OF SHOP DRAWINGS. CONTRACTOR SHALL BE RESPONSIBLE TO INCLUDE IN THE PROPOSAL ALL DATA AND A TECHNICAL COMPARISON PROVING THAT THE PROPOSED DETAIL, MATERIAL, AND SYSTEM COMPLY WITH THE DESIGN CONCEPT AND CODE REQUIREMENTS.
28. THESE DRAWINGS SHALL BE READ IN CONJUNCTION WITH ALL OTHER DISCIPLINES DRAWINGS, AND DOCUMENTS PERTAINING TO THIS CONTRACT.
29. PARTITIONS AND WALLS ARE DIMENSIONED TO THE UNFINISHED FACE OF THE MASONRY, CONCRETE, FACE OF STUD; TYPICAL THROUGHOUT THE ENTIRE PROJECT, UNLESS NOTED OTHERWISE.
30. PARTITIONS AND WALLS SHOWN CENTERED ON COLUMN CENTER, COLUMN/GRID LINES, OR FLUSH FACE WITH STRUCTURAL COLUMNS ARE NOT DIMENSIONED.
31. FOR DIMENSIONS & LOCATIONS OF ALL STRUCTURAL MEMBERS, REFER TO STRUCTURAL DRAWINGS. DISCREPANCIES ARE TO BE BROUGHT TO THE NOTICE OF THE ARCHITECT AND ENGINEER TO PROVIDE CLARIFICATION.
32. ALL FLOOR LEVELS SHOWN ON ARCHITECTURAL BUILDING ELEVATIONS & SECTIONS ARE FINISH FLOOR LEVELS UNLESS NOTED OTHERWISE.
33. DETAILS NOT SHOWN BUT SIMILAR IN CHARACTER TO THOSE DETAILED SHALL BE APPLIED. WHERE SPECIFIC DIMENSIONS, DETAILS, OR DESIGN INTENT CANNOT BE DETERMINED THE CONTRACTOR SHALL CONSULT THE ARCHITECT AND/OR THE ENGINEER BEFORE PROCEEDING WITH WORK.
34. LEVELS SHOWN FOR TOP OF PARAPETS & WALLS ARE TO TOP OF STRUCTURE DO NOT ALLOW FOR FINISHES UNLESS OTHERWISE NOTED.
35. DIMENSIONS DO NOT INCLUDE FINISHES UNLESS OTHERWISE INDICATED.
36. CONTRACTOR SHALL PROVIDE THE NECESSARY BACKING FOR DIFFERENT ACCESSORIES AND FIXTURE FIXATIONS PER STRUCTURAL DRAWINGS AND WEIGHT LIMITS. MAJOR FIXTURES AND ACCESSORIES REQUIRING SPECIAL STRUCTURAL CALCULATIONS AND INPUT SHALL BE RAISED BY THE CONTRACTOR FOR THE ENGINEER'S CLARIFICATION.
37. LEVELS OF EXTERNAL FLOOR FINISHES ARE SHOWN AS NOMINAL FINISHES ADJACENT TO BUILDING, AND SHALL BE LAID TO SLOPE AWAY FROM THE BUILDING OR AS INDICATED OTHERWISE.
38. ALL TILED FLOORS IN WET AREAS SHALL BE LAID TO SLOPE TO DRAINAGE POINTS, ALL SLOPES SHALL BE 0.5% MINIMUM, OR AS INDICATED OTHERWISE.
39. THE JOINT SPACING IN CEMENT PLASTER/STUCCO SHOULD MEET THE FOLLOWING CRITERIA:
A. NO LENGTH SHOULD BE GREATER THAN 18 FEET IN EITHER DIRECTION.
B. NO PANEL SHOULD EXCEED 144 SQUARE FEET FOR VERTICAL APPLICATIONS.
C. NO PANEL SHOULD EXCEED 100 SQUARE FEET FOR HORIZONTAL, CURVED, OR ANGULAR SECTIONS.
D. NO LENGTH-TO-WIDTH RATIO SHOULD EXCEED 2 ½ TO 1 IN ANY GIVEN PANEL.
40. ALL METAL FLASHING COLOR FINISHES SHALL BE FINISHED TO MATCH ADJACENT EXTERNAL BUILDING ELEVATION ELEMENTS UNLESS OTHERWISE NOTED.
41. WHERE WATERPROOFING IS PUNCTURED BY FIXATIONS, OR OTHER ELEMENTS, CONTRACTOR SHALL ENSURE THEIR WATERPROOF SEAL IS IN ACCORDANCE WITH THE MANUFACTURER'S RECOMMENDATIONS.

[SBT] SUBMITTALS:

1. BASIC SUBMITTALS INCLUDE THE REQUIREMENTS FOR THE FOLLOWING:
A. GENERAL: MANUFACTURER'S PRODUCT DATA INCLUDING INFORMATION FOR THE FOLLOWING:
a. LOAD TABLES AND CALCULATIONS VERIFYING STRUCTURAL REQUIREMENTS.
b. FABRICATION PROCESS, MANUFACTURER'S PRODUCT DATA AND TYPICAL INSTALLATION DETAILS, SHOP APPLIED PAINT PRODUCTS AND OTHER COMPONENTS WHERE NECESSARY TO EXPLAIN CONSTRUCTION AND PRODUCT SPECIFICATIONS.
c. PRODUCT COMPONENT DIMENSIONS ASSEMBLY, ANCHORAGE AND FASTENERS.
d. MANUFACTURER'S LITERATURE FOR ALL MATERIALS PROPOSED FOR USE, SUBSTANTIATING THAT MATERIALS COMPLY WITH SPECIFIED AHJ/CODE REQUIREMENTS.
e. PRODUCT DATA: MANUFACTURER'S SPECIFICATIONS FOR MANUFACTURED PRODUCTS TO BE USED IN THE FABRICATION OF WORK
INFORMATIONAL SUBMITTALS:
1. SUBMITTALS SHALL INCLUDE THE REQUIREMENTS FOR THE FOLLOWING:
a. GENERAL: MANUFACTURER'S PRODUCT DATA INCLUDING INFORMATION FOR THE FOLLOWING:
b. SUBMIT INFORMATION NECESSARY TO ESTABLISH AND DOCUMENT COMPLIANCE WITH THE LOCAL GREEN BUILDING CODE WHERE REQUIRED.
c. CONTRACTOR SHALL PROVIDE CHAIN-OF-CUSTODY CERTIFICATES INCLUDING DOCUMENTATION THAT THE MANUFACTURER/FABRICATOR IS CERTIFIED FOR CHAIN OF CUSTODY BY AN ACCREDITED CERTIFICATION BODY.
d. FOR WATER-BORNE PRESERVATIVES, INCLUDE STATEMENT THAT MOISTURE CONTENT OF TREATED MATERIALS WAS REDUCED TO A MAXIMUM OF 19 PERCENT PRIOR TO SHIPMENT OF WOOD PRODUCTS TO THE PROJECT SITE.
2. FOR INSTALLED PRODUCTS INDICATED TO COMPLY WITH DESIGN LOADS INCLUDE:
a. STRUCTURAL ANALYSIS DATA, FOR INFORMATION ONLY, SIGNED AND SEALED BY THE QUALIFIED PROFESSIONAL ENGINEER RESPONSIBLE FOR THEIR PREPARATION.
3. CLOSEOUT SUBMITTALS:
DELEGATED-DESIGN:
1. ENGINEERING DATA FOR:
A. RAILINGS AND GUARDRAILS.
B. SUBMIT CALCULATIONS BEFORE PROCEEDING WITH FABRICATION OF ANY ELEMENTS REQUIRING STRUCTURAL FRAMING, SUPPORT OR BRACING THAT IS NOT SHOWN ON THE DRAWINGS.
C. CALCULATIONS VERIFYING COMPLIANCE WITH STRUCTURAL DESIGN CRITERIA BY DESIGN ENGINEER AND SHOWING REACTIONS TO STRUCTURE.
D. DRAWINGS SHALL BE SIGNED BY DESIGN ENGINEER, OR CERTIFICATION THAT STRUCTURAL PORTION OF DRAWINGS ARE IN COMPLIANCE WITH DESIGN CALCULATIONS SHALL BE SUBMITTED. ALTHOUGH ALL CALCULATIONS SHALL BE SUBMITTED, ONLY REACTIONS TO STRUCTURE ARE SUBJECT TO REVIEW.

[PRT] PERMITS, AND INSPECTIONS

1. CONTRACTOR TO OBTAIN AND PAY FOR ALL REQUIRED PERMITS AND INSPECTIONS.
2. INSPECTIONS BY REGULATORY AUTHORITIES:
A. HAVE ACCEPTANCE INSPECTION REQUIRED BY LOCAL AUTHORITY PERFORMED BY ENFORCING AGENCY.
B. IN ADDITION TO INSPECTIONS AND TEST REQUIRED BY LOCAL AUTHORITY, PERFORM ALL APPLICABLE INSPECTIONS AND TEST CONTAINED IN PART I AND II OF ANSI A17.2.
C. SCHEDULE TESTS WITH AGENCIES AND ARCHITECT, OWNER'S REPRESENTATIVE, AND CONTRACTOR PRESENT.

[SPL] SAMPLES:

1. APPLY SPECIFIED FINISH TO SAMPLES APPLIED IN STEP FASHION SHOWING UNFINISHED SURFACE AND EACH APPLIED COATING.
2. A SAMPLE IS A SEPARATED PART OF A PRODUCT OR A PRODUCT AND IS AN ILLUSTRATIVE OR TYPICAL EXAMPLE OF THAT PRODUCT.
3. THE CONTRACTOR SHALL SUBMIT AT LEAST TWO (2) SAMPLES FOR THE FINISH PRODUCTS REQUIRED PER ARCHITECT AND/OR OWNER'S REQUEST. ONE (1) SAMPLE SHALL BE RETURNED TO THE CONTRACTOR AND THE REMAINING SAMPLE WILL BE AVAILABLE WITH THE ARCHITECT OR OWNER FOR REFERENCE AND RECORD.
4. THE PURPOSE OF SAMPLES IS TO ESTABLISH AN ACCEPTABLE QUALITY OR QUALITY RANGE FOR THE PRODUCTS TO BE INCORPORATED INTO THE WORK.
5. THE ARCHITECT/ENGINEER'S REVIEW IS FOR CONFORMITY TO THE DESIGN CONCEPT ONLY. THE ENGINEER'S REVIEW DOES NOT MEAN THE ENGINEER ACCEPTS RESPONSIBILITY FOR THE DETAIL DESIGN INHERENT WITHIN THE SAMPLES.

[TST] TESTING:

1. OWNER WILL SELECT AN INDEPENDENT TESTING AGENCY TO PERFORM THE INSPECTIONS, TESTS AND PREPARE TEST REPORTS WHERE REQUIRED AND REQUESTED.
2. TESTING AGENCY: CONDUCT AND INTERPRET TESTS AND STATE IN WRITTEN REPORTS WHETHER TEST SPECIMENS COMPLY WITH REQUIREMENTS AND SPECIFICALLY STATE ANY DEVIATIONS THERE FROM.
3. ALUMINUM-FRAME ENTRANCES AND GLAZED ALUMINUM CURTAIN WALLS QUALITY ASSURANCE:
A. FABRICATOR/INSTALLER QUALIFICATIONS: CONTRACTOR SHALL ENGAGE A SINGLE FIRM TO ASSUME UNDIVIDED RESPONSIBILITY FOR THIS PROJECT WITH A RECORD OF SUCCESSFUL IN- SERVICE PERFORMANCE. RESPONSIBILITY SHALL INCLUDE ALL COMPONENTS OF THE SYSTEMS INCLUDING ATTACHMENT, SUPPORTS AND OPERATION TO MEET THE DESIGN INTENT.
B. FABRICATOR/INSTALLER QUALIFICATIONS: COMPANY SPECIALIZING IN WORK SHALL DEMONSTRATE THEIR EXPERIENCE ON JOBS OF SIMILAR TYPE AND COMPLEXITY, AND APPROVED BY PROJECT MANUFACTURER.
4. PERFORM TESTS AS REQUIRED BY LEGAL REQUIREMENTS, REGULATORY AGENCIES, AND OWNER.

GREG KORN AIA
ARCHITECTS

INTERIOR ALTERATION

2525 MOORPARK RD
THOUSAND OAKS, CA 91362

Client

Andrew Mooney, Park Planner
CONEJO RECREATION & PARK DISTRICT
403 W. Hillcrest Drive
Thousand Oaks CA 91360
(805) 495-6471
amooney@crpd.org

Architect

G. Ian Korn, AIA
GKA Architects
351 Rolling Oaks Dr Ste 202
Thousand Oaks, CA 91361
gkorn@gka-arc.com
(805) 370-1300

MEP Engineer

Arash Nazari, PE
A&N Design Group Inc
21550 Oxnard Street #300
Woodland Hills, CA 91367
818-288-4361
arash@an-dg.com

Plan Examiner

TBD
City of Thousand Oaks
Building Division
2100 E Thousand Oaks Blvd
Thousand Oaks, CA 91361
(805) 449-2100

No.	Description	Date
1	Schematic Design to Client	08.07.19
2	Schematic Design to Client- Storage	08.27.19
3	Building Dept Submittal	09.23.19
4	Building Dept Corrections	10.25.19
5	Public Works Corrections	11.07.19
6	CDs to Client- Storage	01.13.20
7	CDs to Client- Storage Rev	01.21.20

Project number	2019003
Date	01.21.20
Drawn by	GK
Checked by	GK

Drawing Name
GENERAL NOTES

Drawing No.
G-002.00

NOTE: DO NOT SCALE DRAWINGS
Scale AS NOTED

GENERAL SPECIFICATIONS

1 THE SPECIFICATIONS LISTED HEREIN ARE GENERIC, AND INTENDED SOLELY FOR THE GIVEN PROJECT AT THE PROJECT ADDRESS.

2 ALL CONCRETE SURFACES SHALL HAVE A LIGHT BROOM FINISHED, NON-SLIP SURFACE UNLESS NOTED OTHERWISE.

3 PROVIDE GALVANIC ISOLATION BETWEEN DISSIMILAR METALS.

4 ALL EQUIPMENT, ACCESSORIES, AND APPURTENANCES WHICH ARE MOUNTED ON STUD WALLS ARE REQUIRED TO BE ATTACHED THROUGH THE WALL FINISH INTO SOLID FIRE RETARDANT WOOD BLOCKING OR OTHER ACCEPTABLE SOLID WEIGHT-BEARING BACKING UNLESS THE MANUFACTURER SPECIFICALLY RECOMMENDS OTHERWISE. PROVIDE SOLID 2x10 FIRE RETARDANT WOOD BLOCKING SECURELY NAILED OR SCREWED AT ALL LOCATIONS UNLESS NOTED OTHERWISE OR INDICATED DIFFERENTLY IN DRAWINGS OR MANUFACTURER'S INSTRUCTIONS.

5 COORDINATE ALL ROOF PENETRATION REQUIREMENTS FOR MECHANICAL, PLUMBING, ELECTRICAL, AND SECURITY SYSTEM REQUIREMENTS.

6 ALL SHEET METAL BUILDING COMPONENTS SHALL HAVE HEMMED EDGES IN AREAS ADJACENT TO OCCUPIED SPACES.

7 EVERY EXIT DOOR SHALL BE OPENABLE FROM THE INSIDE WITHOUT THE USE OF A KEY, TOOL, OR SPECIAL KNOWLEDGE OR EFFORT. "APPLIES ALSO TO EXIT GATES". THE UNLATCHING OF ANY LEAF SHALL NOT REQUIRE MORE THAN ONE OPERATION.

8 WHERE DOORS ARE LOCATED NEXT TO A WALL, THERE SHALL BE 3-1/2' MIN. CLEARANCE BETWEEN WALL FINISH SURFACE AND FACE OF DOOR IN 90 DEGREE OPEN POSITION, UNLESS DETAILED OR DIMENSIONED OTHERWISE.

9 MAXIMUM EFFORT TO OPERATE DOORS SHALL NOT EXCEED THE FOLLOWING:

A. INTERIOR DOORS - 5 POUNDS±
B. EXTERIOR DOORS - 8.5 POUNDS±
C. FIRE DOORS - 15 POUNDS±

10 UNLESS OTHERWISE INDICATED, INCIDENTAL CONSTRUCTIONS SUCH AS MINOR SOFFITS, RECESSES, AND PARTIAL INTERIOR ELEVATIONS NOT SHOWN SHALL HAVE APPLICABLE DETAILS, FEATURES, AND MATERIALS SIMILAR TO IMMEDIATELY ADJACENT CONTIGUOUS CONSTRUCTION.

11 WHERE DIFFERENT WALL OR CEILING THICKNESSES OCCUR WITHIN A GIVEN SURFACE DUE TO SHEATHING AND FINISH REQUIREMENTS, PROVIDE ADDITIONAL GYPSUM WALLBOARD, PLYWOOD STRIPPING EQUIVALENT TO ADJACENT SHEAR PANEL, AND OTHER SHIMMING AS REQUIRED FOR A FLUSH, UNINTERRUPTED SURFACE FINISH FROM CORNER TO CORNER.

12 PROVIDE FURRED-OUT SURFACES WHERE REQUIRED TO CONCEAL PIPING, DUCT, ETC. IN FINISHED ROOMS. SHOULD CONDITIONS NECESSITATE ALTERATIONS IN INDICATED CEILING HEIGHTS DUE TO STRUCTURAL OR MECHANICAL REQUIREMENTS, OBTAIN REVIEW BY ARCHITECT BEFORE INSTALLING FURRING. THERE SHALL BE NO EXPOSED CONSTRUCTION UNLESS NOTED OTHERWISE ON THE FINISH SCHEDULE.

13 COORDINATE CONSTRUCTION OF ALL DRYWALL SOFFITS, SOFFIT FRAMING, AND SUSPENDED DRYWALL CEILINGS WITH MECHANICAL, PLUMBING, ELECTRICAL, SECURITY, FIRE ALARM, AND FIRE PROTECTION SYSTEMS.

14 ALL WORK CALLED OUT TO BE "PAINTED" AND/OR "PRIMED AND PAINTED" SHALL BE PRIMED PER MANUFACTURER'S RECOMMENDATIONS.

15 ALL EXPOSED EDGES OF GYPSUM WALLBOARD AND OTHER PANEL PRODUCTS SHALL BE FINISHED WITH EDGE CASING "J" TRIM FOR A STRAIGHT AND SQUARE EDGE.

16 COORDINATE ALL EQUIPMENT ROUGH-IN REQUIREMENTS IN CONSULTATION WITH EQUIPMENT MANUFACTURERS.

17 SPRINKLER SYSTEM TO BE SEPARATE DESIGN BUILD SUBMITTAL (NOT IN CONTRACT), AND SHALL BE APPROVED BY AUTHORITIES PRIOR TO INSTALLATION.

18 PENETRATIONS OF FIRE-RESISTIVE WALLS, FLOOR-CEILING AND ROOF-CEILING SHALL BE PROTECTED AS REQUIRED IN CURRENT IBC

19 DRAFT STOPS MUST BE INSTALLED IN FLOOR/CEILING ASSEMBLIES SO THAT ANY CONCEALED SPACE DOES NOT EXCEED 3,000 SQ. FT. OR 60 FEET IN LENGTH. 708.3

a) IN BUILDINGS USED FOR OTHER THAN RESIDENTIAL OCCUPANCIES, DRAFT STOPS MUST BE INSTALLED IN WOOD FRAME FLOOR CONSTRUCTION CONTAINING CONCEALED SPACE. SUCH DRAFT STOPS MUST BE INSTALLED SO THAT THE AREA OF THE CONCEALED SPACE DOES NOT EXCEED 3000 SQUARE FEET AND SO THAT THE HORIZONTAL DIMENSION BETWEEN STOPS DOES NOT EXCEED 100 FEET.

b) IN BUILDINGS USED FOR OTHER THAN RESIDENTIAL OCCUPANCIES, DRAFT STOPS MUST BE INSTALLED IN THE ATTIC (MANSARDS) (OVERHANGS) (FALSE FRONTS SET OUT FROM WALLS) (SIMILAR CONCEALED SPACES) FORMED BY COMBUSTIBLE CONSTRUCTION. SUCH DRAFT STOPS MUST BE INSTALLED SO THAT THE AREA OF THE CONCEALED SPACE DOES NOT EXCEED 9000 SQUARE FEET AND SO THAT THE HORIZONTAL DIMENSION BETWEEN STOPS DOES NOT EXCEED 100 FEET.

c) SHOW DRAFT-STOP CONSTRUCTION ON THE PLANS. DRAFT-STOPPING MATERIALS MUST NOT BE LESS THAN ½-INCH GYPSUM BOARD, 3/8-INCH PLYWOOD, 3/8-INCH TYPE 2-M PARTICLE BOARD OR OTHER MATERIALS APPROVED BY THE BUILDING DEPARTMENT. DRAFT-STOPPING MUST BE ADEQUATELY SUPPORTED.

20 MINERAL FIBER INSULATION SHALL BE INSTALLED IN JOIST SPACE WHENEVER A PLUMBING OR DUCT PENETRATES A FLOOR/CEILING ASSEMBLY OR WHERE SUCH UNIT PASSES THROUGH THE PLANE OF A FLOOR/CEILING ASSEMBLY FROM WITHIN A WALL. THE INSULATION SHALL BE INSTALLED TO A POINT TWELVE INCHES BEYOND THE PIPE OR DUCT IN BOTH DIRECTIONS.

21 PENETRATIONS OF FIRE-RESISTIVE WALLS, FLOOR-CEILING AND ROOF-CEILING SHALL BE PROTECTED AS REQUIRED IN IBC

22 WALL OPENINGS AND RECESSED ELEMENTS OVER 16 SQ. INCHES IN RATED WALLS MUST BE PROTECTED. THIS INCLUDES WALL CABINETS, RECESSED FIRE HOSE CABINETS, RECESSED FIRE EXTINGUISHER CABINETS, AND RECESSED ELECTRICAL PANELS AND BOXES. RECESSES MUST BE WRAPPED WITH CONTINUOUS TYPE X GYPSUM WALLBOARD SO THAT THE WALL RATING IS CONTINUOUS.

23 CAULK AND SEAL AROUND ALL PLUMBING AND ELECTRICAL PENETRATIONS INTO THE BUILDING ENVELOPE.

24 CAULK AND SEAL AROUND ALL WINDOW AND DOOR FRAMES, BETWEEN WALL SILL PLATES AND FLOORS, AND BETWEEN EXTERIOR WALL PANELS. SEE TYPICAL EXTERIOR WALL MEASURES.

25 THE BUILDING DESIGN MEETS THE REQUIREMENTS OF TITLE 24, PART 6, STATE ENERGY CODE. THE INSULATION INSTALLER SHALL POST IN A CONSPICUOUS LOCATION IN THE BUILDING A CERTIFICATE SIGNED BY THE INSTALLER AND CONTRACTOR STATING THAT THE INSTALLATION CONFORMS TO THE REQUIREMENTS OF STATE STATE ENERGY CODE AND THAT THE MATERIALS INSTALLED CONFORM TO THE REQUIREMENTS OF TITLE 20, CHAPTER 2, SUBCHAPTER 4, ARTICLE 3. REFER TO THE ENERGY CONSERVATION CALCULATION SHEET(S) IN THE DRAWINGS.

26 ALL INSULATION MATERIALS SHALL BE CERTIFIED BY THE MANUFACTURER AS COMPLYING WITH THE STATE QUALITY STANDARDS FOR INSULATING MATERIAL.

27 DOORS AND WINDOWS BETWEEN CONDITIONED SPACE AND OUTSIDE SPACE OR BETWEEN CONDITIONED SPACE AND UNCONDITIONED SPACE SHALL BE FULLY WEATHER-STRIPPED.

28 MANUFACTURED DOORS AND WINDOWS SHALL BE CERTIFIED AND LABELED IN COMPLIANCE WITH THE APPROPRIATE INFILTRATION STANDARDS. ALL EXTERIOR OPENINGS SHALL BE PROPERLY WEATHERSTRIPPED, CERTIFIED, AND LABELED.

29 DUCTS SHALL BE CONSTRUCTED, INSTALLED, AND INSULATED PER THE REQUIREMENTS OF THE C.M.C. ALL JOINTS OF THE DUCT SYSTEM SHALL BE TIGHTLY SEALED WITH MASTIC OR TAPE SUITABLE FOR THE PURPOSE.

30 ALL SPACE CONDITIONING EQUIPMENT SHALL BE C.E.C. CERTIFIED.

31 ALL FAN SYSTEMS EXHAUSTING AIR FROM THE BUILDING SHALL BE PROVIDED WITH BACKDRAFT DAMPERS.

32 ALL WATERPROOFING SYSTEMS SHALL BE INSTALLED PER MANUFACTURERS' SPECIFIC INSTRUCTIONS AND REQUIREMENTS. INSTALLATIONS SHALL BE IN STRICT COMPLIANCE WITH ALL MANUFACTURERS' WARRANTEES, GUARANTEES, AND COVERAGE.

33 INSTALLERS OF WATERPROOFING SYSTEMS SHALL BE WELL-VERSED IN THE STANDARDS OF THEIR INDUSTRY AND SHALL BE EXPERTS IN THEIR FIELD.

34 SHEET METAL WORK SHALL MEET ALL REQUIREMENTS OF THE SHEET METAL AND AIR CONDITIONING CONTRACTORS NATIONAL ASSOCIATION, INC. (SMACNA).

35 ALL ROOFING WORK SHALL MEET THE REQUIREMENTS OF THE NATIONAL ROOFING CONTRACTORS ASSOCIATION (NRCA).

WATERPROOFING

36 WATERPROOFING SYSTEMS SHALL OVERLAP EACH OTHER AND SHALL BE SUITABLE TO BE APPLIED TOGETHER.

37 WATERPROOFING SYSTEMS SHALL BE INSTALLED BY QUALIFIED PERSONNEL PER THE SPECIFICATIONS AND MANUFACTURERS' REQUIREMENTS. WATERPROOFING SHALL BE PROTECTED FROM ALL FORMS OF DAMAGE DURING CONSTRUCTION, INCLUDING ENVIRONMENTAL DAMAGE AND ULTRAVIOLET RAY EXPOSURE.

38 VERTICAL WATERPROOFING SYSTEMS SHALL EXTEND OVER THE HORIZONTAL EDGE AND SURFACE OF ADJACENT MEMBRANES.

39 WATERPROOFING SYSTEMS SHALL CONTAIN REDUNDANT PROTECTION IN CONFORMANCE WITH INDUSTRY STANDARDS.

40 SEALANT IS NOT CONSIDERED A PRIMARY MEANS OF WATERPROOFING PROTECTION.

41 THE OWNER SHALL BE MADE AWARE OF ALL MAINTENANCE REQUIREMENTS FOR THE SELECTED WATERPROOFING SYSTEM. THE OWNER SHALL ALSO BE MADE AWARE OF ALL SPECIAL MAINTENANCE REQUIREMENTS NOT CONTAINED IN THE TECHNICAL INFORMATION SUPPLIED IN THE MANUFACTURER'S SPECIFICATIONS AND DATA.

42 CLOSURE PLATES, WEEP SCREEDS, METAL EAVE CLOSURES, BALCONY ENDS, ETC. SHALL BE PROPERLY WEEPED TO PREVENT DAMMING AND THE ACCUMULATION OF MOISTURE. MEMBRANES BEHIND WEEP HOLES SHALL BE CERTIFIED CLEAN OF DUST, DIRT, ETC. PRIOR TO THE INSTALLATION OF FINISH MATERIALS AND/OR PROTECTION SYSTEMS.

43 ALL WATERPROOFING MEMBRANES AND WEATHER RESISTIVE BARRIERS SHALL BE INSTALLED TO PROPERLY LAP AND "SHINGLE" OVER ONE ANOTHER SO AS TO SHED WATER AWAY FROM OCCUPIED SPACE. AS A RULE, TOP LAYERS ARE TO BE SHINGLED IN THE DIRECTION OF WATER FLOW. SHINGLE TOP LAYERS OVER LOWER LAYERS SO AS TO SHED WATER AWAY FROM THE BUILDING.

44 SUBSTRATES SHALL BE SUITABLE TO ACCEPT THE WATERPROOFING SYSTEM INTENDED FOR USE AND SHALL BE SUITABLY TREATED AND PREPARED PER MANUFACTURER'S REQUIREMENTS.

45 DRAINAGE SLOPES REFLECTED ON THE DRAWINGS OR AS REQUIRED BY CODE SHALL BE CONSIDERED THE MINIMUM REQUIRED THROUGHOUT THE LIFE OF THE BUILDING. CONSTRUCTION SHALL INCLUDE INCREASES TO THE SLOPE TO ALLOW FOR ANY POSSIBLE DEFLECTION, CREEP, CAMBERS, CROWNS, OR OTHER SIMILAR ISSUES SO THAT POSITIVE DRAINAGE IS MAINTAINED.

46 SEISMIC JOINT ASSEMBLIES SHALL BE WATERPROOF. MOISTURE BARRIER BACKING SHALL BE PROVIDED BEHIND ALL COVERS, BOTH HORIZONTAL AND VERTICAL. MOISTURE BARRIERS SHALL BE CONTINUOUS AND SHALL BE PROVIDED WITH A MEANS OF DRAINAGE TO THE EXTERIOR. MOISTURE BARRIERS SHALL BE SUFFICIENTLY LAPPED AND SEALED WITH FLEXIBLE SELF-ADHERING FLEXIBLE FLASHING TO PROVIDE A COMPLETE AND CONTINUOUS WATERPROOF BARRIER.

47 JOINTS AND CORNER CONDITIONS IN SHEET METAL, SEISMIC JOINTS, FLEXIBLE FLASHING SYSTEMS, AND ANY OTHER WATER AND MOISTURE BARRIER SYSTEMS WHERE CUTTING AND JOINING ARE REQUIRED SHALL BE CONSTRUCTED IN SUCH A MANNER AS TO YIELD A COMPLETELY WATERTIGHT ASSEMBLY. SUCH WORK SHALL BE PERFORMED BY QUALIFIED INSTALLERS FAMILIAR WITH INDUSTRY STANDARD BEST PRACTICES.

48 ALL SHEET METAL FLASHING CONNECTIONS AND JOINTS SHALL BE WATERTIGHT.

081113 HOLLOW METAL DOORS AND FRAMES

HOLLOW METAL DOORS AND FRAMES INCLUDES THE REQUIREMENTS FOR THE FOLLOWING:
1. DOOR AND FRAME LOCATION SCHEDULE. COVER EACH TYPE OF DOOR, FRAME, AND FRAME CONDITION INCLUDING STOREFRONT FRAMING AND GLAZING MATERIALS.
2. ELEVATION OF DOORS AND FRAMES AND THEIR LOCATIONS, DESCRIPTIVE NOMENCLATURE, JAMB AND HEAD DETAILS, MATERIAL DESCRIPTION AND GAGES.

087100 DOOR HARDWARE

092116 GYPSUM BOARD ASSEMBLY

DOOR HARDWARE INCLUDES THE REQUIREMENTS FOR THE FOLLOWING:

1. QUALIFICATIONS:
A. INSTALLER QUALIFICATIONS: COMPANY SPECIALIZING IN PERFORMING GYPSUM BOARD APPLICATION AND FINISHING SHALL have THREE YEARS OF DOCUMENTED EXPERIENCE.
2. STANDARDS:
B. WORK SHALL COMPLY WITH THE FOLLOWING STANDARDS:
a. ANSI A108.11 - INTERIOR INSTALLATION OF CEMENTITIOUS BACKER UNITS
b. ANSI A118.9 CEMENT BASED BOARD: NON-GYPSUM BASED, AGGREGATED PORTLAND CEMENT PANELS WITH GLASS FIBER MESH EMBEDDED IN FRONT AND BACK SURFACES
c. ASTM C475/C475M - JOINT COMPOUND AND JOINT TAPE FOR FINISHING GYPSUM BOARD
d. ASTM C840 - APPLICATION AND FINISHING OF GYPSUM BOARD
e. ASTM C1178/C1178M - COATED GLASS MATTED WATER-RESISTANT GYPSUM BACKING PANEL
f. ASTM C1288 - DISCRETE NON-ASBESTOS FIBER CEMENT INTERIOR SUBSTRATE SHEET
g. ASTM C1325 - NON-ASBESTOS FIBER-MAT REINFORCED CEMENT SUBSTRATE SHEET
h. ASTM C1396/C1396M - GYPSUM BOARD
i. ASTM D3273 - MOLD RESISTANCE, SCORE OF 10
j. ASTM C1658/1658M - GLASS-MAT GYPSUM PANEL
k. ASTM E413 - CLASSIFICATION FOR RATING SOUND INSULATION
l. ASTM C754 - CEILING HANGERS TYPE AND SIZE FOR SPACING
3. ASSEMBLY FRAMING:
A. ASTM C645 - NON-LOADING FRAMING SYSTEM COMPONENTS, GALVANIZED STEEL SHEET, OF SIZE AND PROPERTIES NECESSARY TO COMPLY WITH ASTM C754 FOR THE SPACING INDICATED, WITH MAXIMUM DEFLECTION OF WALL FRAMING OF L/240 AT 5 PSF.
B. STUDS: C SHAPED WITH FLAT OF FORMED WEB WITH KNURLED FACE.
C. RUNNERS: U SHAPED, SIZED TO MATCH STUDS
D. CEILING CHANNELS: C SHAPED
E. SUSPENDED CEILING AND SOFFITS: LEVEL CEILING TO A TOLERANCE OF 1/1200, LATERALLY BRACE ENTIRE SUSPENSION SYSTEM
F. FURRING: HAT SHAPED SECTIONS, MIN DEPTH OF 7/8"
G. RESILIENT FURRING CHANNELS: 1/2" DEEP, FOR ATTACHMENT TO SUBSTRATE THROUGH ONE LEG ONLY
4. ASSEMBLY ACCESSORIES:
A. PLACE CONTROL JOINTS NOT MORE THAN 30 FEET APART ON WALLS and CEILING OVER 50 FEET LONG.
B. PROVIDE CORNER BEAD AND EDGE TRIM, TYPICAL.
C. ACOUSTIC SEALANT: ACRYLIC EMULSION LATEX OR WATER-BASED ELASTOMERIC SEALANT, DO NOT USE SOLVENT-BASED NON-CURING BUTYL SEALANT.
D. BLOCKING: INSTALL MECHANICALLY FASTENED STEEL SHEET BLOCKING FOR SUPPORT OF FRAMED OPENINGS, WALL MOUNTED CABINETS, PLUMBING FIXTURES,TOILET PARTITIONS, TOILET ACCESSORIES, WALL MOUNTED DOOR HARDWARE.
5. ASSEMBLY FINISH:
A. FINISH GYPSUM BOARD IN ACCORDANCE WITH LEVELS DEFINED IN ASTM C840 AS FOLLOWS:
a. LEVEL 5: WALLS AND CEILING TO RECEIVE SEMI-GLOSS OR GLOSS PAINT FINISH u.n.o., AFTER JOINTS HAVE BEEN PROPERLY TREATED, SPRAY APPLY HIGH BUILD DRYWALL SURFACER OVER ENTIRE SURFACE TO achieve A FLAT AND TOOL-MARK FREE FINISH.
v. LEVEL 4: WALLS AND CEILING TO RECEIVE PAINT FINISH OR WALL COVERINGS, U.N.O.
w. LEVEL 2: IN UTILITY AREAS, BEHIND CABINETS AND ON BACKING BOARD TO RECEIVE TILE FINISH
x. LEVEL 1: FIRE RATED WALL AREAS ABOVE FINSIHED CEILINGS, WHETHER OR NOT ASSESSIBLE IN THE COMPLETED CONSTRUCTION.
6. ASSEMBLY TOLERANCE:
A. MAXIMUM VARIATION OF FINISHED GYPSUM BOARD SURFACE FROM TRUE FLATNESS SHALL BE 1/8" IN 10 FEET IN ANY DIRECTION

099000 PAINTING AND COATING

QUALIFICATIONS:
1. INSTALLER QUALIFICATIONS: COMPANY SPECIALIZING IN PERFORMING PAINTING AND COATING SHALL HAVE THREE YEARS OF DOCUMENTED EXPERIENCE.
STANDARDS:
1. 40 CFR 59, SUBPART D - NATIONAL VOLATILE ORGANIC COMPOUND EMISSION STANDARDS FOR ARCHITECTURAL COATINGS, U.S. ENVIRONMENTAL PROTECTION AGENCY.
2. ASTM D16 - STANDARD TERMINOLOGY FOR PAINT, RELATED COATINGS, MATERIALS AND APPLICATIONS
3. ASSTM D4442 - STANDARD TEST METHODS FOR DIRECT MOISTURE CONTENT MEASUREMENT OF WOOD AND WOOD-BASED MATERIALS.
4. GREENSEAL GS-11 - PAINTS
SUBMITTAL:
1. PRODUCT DATA: PROVIDE COMPLETE LIST OF ALL PRODUCTS TO BE USED, EITHER THE FOLLOWING INFORMATION FOR EACH:
A. MANUFACTURE'S NAME, PRODUCT NAME, CATALOG NUMBER
B. MPI PRODUCT NUMBER
C. CROSS-REFERENCE TO SPECIFIED PAINT SYSTEM PRODUCT IS TO BE USED IN, INCLUDE DESCRIPTION OF EACH SYSTEM.
D. MANUFACTURER'S INSTALLATION INSTRUCTIONS
E. IF PROPOSAL OF SUBSTITUTIONS IS ALLOWED UNDER SUBMITTAL PROCEDURES, EXPLANATION OF ALL SUBSTITUTIONS PROPOSED.
SAMPLES:
1. SUBMIT THREE PAPER SAMPLES, 8-1/2" X 11" IN SIZE, ILLUSTRATING RANGE OF COLORS AVAILABLE FOR EACH FINISHING PRODUCT SPECIFIED.
A. WHERE SHEEN IS SPECIFIED, SUBMIT SAMPLES IN ONLY THAT SHEEN
B. WHERE SHEEN IS NOT SPECIFIED, SUBMIT EACH COLOR IN EACH SHEEN AVAILABLE.
2. SUBMIT TWO PAINTED SAMPLES, ILLUSTRATING SELECTED COLORS AND TEXTURE FOR EACH COLOR AND SYSTEM SELECTED WITH SPECIFIC COATS CASCADED. SUBMIT ON ALUMINUM SHEETS.
3. PROVIDE PANEL 3 FEET X 3 FEET ILLUSTRATING SPECIAL COATING COLOR, TEXTURE AND FINISH.
CERTIFICATION:
1. BY MANUFACTURER THAT ALL PAINTS AND COATINGS COMPLY WITH VOC LIMITS SPECIFIED.
2. BY MANUFACTURER THAT ALL PAINTS AND COATINGS DO NOT CONTAIN ANY OF THE PROHIBITED CHEMICALS SPECIFIED.
3. GREENSEAL GS-11 CERTIFICATION
4. LED REPORT: VOC CONTENT OF ALL INTERIOR OPAQUE COATINGS ACTUALLY USED.
5. FOLLOW MANUFACTURER'S RECOMMENDED PROCEDURES FOR PRODUCING BEST RESULT INCLUDING TESTING OF SUBSTRATES, MOISTURE IN SUBSTRATES, AND HUMIDITY AND TEMPERATURE LIMITATION.

6. VOLATILE ORGANIC COMPOUND (VOC) CONTENT:
7. PROVIDE COATINGS THAT COMPLY WITH THE MOST STRINGENT REQUIREMENT SPECIFIED IN THE FOLLOWING:
A. 40 CFR 59, SUBPART D - NATIONAL VOLATILE ORGANIC COMPOUND EMISSION STANDARDS FOR ARCHITECTURAL COATINGS, U.S. ENVIRONMENTAL PROTECTION AGENCY.
B. OZONE TRANSPORT COMMISSION (OTC) MODEL RULE, ARCHITECTURAL, INDUSTRIAL, AND MAINTENANCE COATINGS
a. OPAQUE, FLAT 50G/L MAXIMUM
b. OPAQUE, NON-FLAT 150G/L MAXIMUM
c. OPAQUE, HIGH GLOSS 250G/L MAXIMUM
d. VARNISH, 350G/L MAXIMUM
C. ARCHITECTURAL COATINGS VOC LIMITS OF CALIFORNIA
8. DETERMINATION OF VOC CONTENT: TESTING AND CALCULATION IN ACCORDANCE WITH 40 CFR 59, SUBPART D (EPA METHOD 24), EXCLUSIVE OF COLORANTS ADDED TO A TINT BASE AND WATER ADDED AT PROJECT SITE; OR OTHER METHOD ACCEPTABLE TO AUTHORITIES HAVING JURISDICTION.
9. CHEMICAL CONTENT: THE FOLLOWING COMPOUNDS ARE PROHIBITED:
A. AROMATIC COMPOUNDS: IN EXCESS OF 1.0 PERCENT BY WEIGHT OF TOTAL AROMATIC COMPOUNDS(HYDROCARBON COMPOUNDS CONTAINING ONE OR MORE BENZENE RINGS)
B. ACROLEIN, ACRYLONITRILE, ANTIMONY, BENZENE, BUTYL BENZYL PHTHALATE, 1,2-DICHLOROBENZENE, DIETHYL PHTHALATE, DIMETHYL PHTHALATE, ETHYLBENZENE, FORMALDEHYDE, HEXAVALENT CHROMIUM, ISOPHORONE, LEAD, MERCURY, METHYL ETHYL KETONE, METHYL ISOBUTYL KETONE, METHYLENE CHLORIDE, NAPHTHALENE, TOLUENE (METHYLBENZENE), 1,1,1-TRICHLOROETHANE, VINYL CHLORIDE.
10. FLAMMABILITY: COMPLY WITH APPLICABLE CODE FOR SURFACE BURNING CHARACTERISTICS.
EXTERIOR PAINT:
1. PAINT E-OP-ALL EXTERIOR SURFACES INDICATED TO BE PAINTED, UNLESS OTHERWISE INDICATED:
A. INCLUDING CONCRETE, CONCRETE MASONRY, BRICK, CEMENT BOARD, PRIMED WOOD, AND PRIMED METAL.
a. PREPARATION AS SPECIFIED BY MANUFACTURER.
b. TWO TOP COATS AND ONE COAT PRIMER RECOMMENDED BY MANUFACTURER.
c. TOP COAT(S): EXTERIOR PIGMENTED ELASTOMERIC, WATER BASED; MPI #113.
d. TOP COAT(S): EXTERIOR LIGHT INDUSTRIAL COATING, WATER BASED; MPI #161, 163, 164.
2. PAINT WE-TR-S-WOOD, TRANSPARENT, SEALER, OPTIONAL STAIN:
a. ONE COAT OF STAIN.
b. ONE COAT OF CLEAR SEALER.
3. PAINT ME-OP-3A-FERROUS METALS, UNPRIMED, ALKYD, 3 COAT:
A. ONE COAT OF ALKYD PRIMER.
B. GLOSS: TWO COATS OF ALKYD ENAMEL.
C. SEMI-GLOSS: TWO COATS OF ALKYD ENAMEL.
4. PAINT ME-OP-2A-FERROUS METALS, PRIMED, ALKYD, 2 COAT:
A. TOUCH-UP WITH RUST-INHIBITIVE PRIMER RECOMMENDED BY TOP COAT MANUFACTURER.
B. GLOSS: TWO COATS OF ALKYD ENAMEL.
C. SEMI-GLOSS: TWO COATS OF ALKYD ENAMEL.
5. PAINT MGE-OP-3A-GALVANIZED METALS, ALKYD, 3 COAT:
A. ONE COAT OF GALVANIZE PRIMER.
B. GLOSS: TWO COATS OF ALKYD ENAMEL.
C. SEMI-GLOSS: TWO COATS OF ALKYD ENAMEL.
INTERIOR PAINT:
1. PAINT 1-OP-ALL INTERIOR SURFACES INDICATED TO BE PAINTED, UNLESS OTHERWISE INDICATED:
A. INCLUDING GYPSUM BOARD, CONCRETE, CONCRETE MASONRY, BRICK, WOOD, PLASTER, UNCOATED STEEL, SHOP PRIMED STEEL, GALVANIZED STEEL AND ALUMINUM.
a. TWO TOP COATS AND ONE COAT PRIMER.
b. TOP COAT(S): INSTITUTIONAL LOW ODOR/VOC INTERIOR LATEX; MPI #143-148.
c. FLAT: MPI GLOSS LEVEL 1; USE THIS SHEEN FOR CEILINGS AND OTHER OVERHEAD SURFACES.
d. EGGSHELL: MPI GLOSS LEVEL 3; USE THIS SHEEN AT WALLS.
e. SATIN: MPI GLOSS LEVEL 4; USE THIS SHEEN FOR ITEMS SUBJECT TO FREQUENT TOUCHING BY OCCUPANTS, INCLUDING DOOR FRAMES AND RAILINGS.
f. TOP COAT PRODUCT(S):
1. DUNN EDWARDS SPARTAWALL SWLL10, GLOSS LEVEL 1-FLAT.
2. DUNN EDWARDS SPARTAWALL SWLL 30, GLOSS LEVEL 3-EGGSHELL.
3. FRAZEE COLOR LIFE- EGGSHELL.
g. PRIMER(S): AS FOLLOWS UNLESS OTHER PRIMER IS REQUIRED OR RECOMMENDED BY MANUFACTURER OF TOP COATS:
1. ALL SUBSTRATES: MPI #149, INSTITUTIONAL LOW ODOR/VOC PRIMER SEALER, UNLESS A DIFFERENT PRIMER IS SPECIFIED.
2. PAINT I-OP-MD-DTPAINT I-OP-MD-DT-MEDIUM DUTY DORR/TRIM: FOR SURFACES SUBJECT TO FREQUENT CONTACT BY OCCUPANTS, INCLUDING METALS, WOOD, AND ____:
A. TWO TOP COATS AND ONE COAT PRIMER.
B. TOP COAT(S): INTERIOR EPOXY-MODIFIED LATEX; MPI #115, 215.
C. SEMI-GLOSS: MPI GLOSS LEVEL 5; USE THIS SHEEN AT ALL LOCATIONS.
3. PAINT I-OP-DF-DRY FALL: METALS; EXPOSED STRUCTURE AND OVERHEAD-MOUNTED SERVICES IN UTILITATIAN SPACES, INCLUDING SHOP PRIMED STEEL DECK, STRUCTURAL STEEL, METAL FABRICATIONS, GALVANIZED DUCTS, GALVANIZED CONDUIT, GALVANIZED PIPING, AND ____-
A. TWO TOP COATS AND ONE COAT PRIMER.
B. TOP COAT(S): INTERIOR EPOXY-MODIFIED LATEX; MPI #115, 215.
C. SEMI-GLOSS: MPI GLOSS LEVEL 5; USE THIS SHEEN AT ALL LOCATIONS.
4. PAINT I-OP-DF-DRY FALL: METALS; EXPOSED STRUCTURE AND OVERHEAD-MOUNTED SERVICES IN UTILITARIAN SPACES, INCLUDING SHOP PRIMED STEEL DECK, STRUCTURAL STEEL, METAL FABRICATIONS, GALVANIZED DUCTS, GALVANIZED CONDUIT, GALVANIZED PIPING, AND ____-
A. SHOP PRIMER BY OTHERS.
B. ONE TOP COAT TO MATCH A CLEAR GALVANIZED FINISH AT EXPOSED STEEL METAL BUILDING FRAMES.
C. TOP COAT: ALKYD DRY FALL; MPI #55, 89, 225.
5. PAINT CI-OP-3A-CONCRETE/MASONRY, OPAQUE, ALKYD, 3 COATS:
A. ONE COAT OF BLOCK FILLER.
B. SEMI-GLOSS: TWO COATS OF ALKYD ENAMEL; ____.
C. FLAT: TWO COATS OF ALKYD ENAMEL; ____.
6. PAINT MI-OP-3A-FERROUS METALS, UNPRIMED, ALKYD, 3 COAT:
A. ONE COAT OF ALKYD PRIMER.
B. GLOSS: TWO COATS OF ALKYD ENAMEL; ____.
C. SEMI-GLOSS: TWO COATS OF ALKYD ENAMEL; ____.
7. PAINT MI-OP-3L-FERROUS METALS, UNPRIMED, LATEX, 3 COATS:
A. ONE COAT OF LATEX PRIMER.
B. GLOSS: TWO COATS OF LATEX ENAMEL; ____.
C. SEMI-GLOSS: TWO COATS OF LATEX ENAMEL; ____.
8. PAINT MI-OP-2A-FERROUS METALS, PRIMED, ALKYD, 2 COAT:
A. TOUCH UP WITH ALKYD PRIMER.
B. GLOSS: TWO COATS OF ALKYD PRIMER.
C. SEMI GLOSS: TWO COATS OF ALKYD ENAMEL; ____.
9. PAINT MI-OP-2L-FERROUS METALS, PRIMED, LATEX, 2 COATS:
A. TOUCH-UP WITH LATEX PRIMER.
B. GLOSS: TWO COATS OF LATEX ENAMEL; ____.
C. SEMI-GLOSS: TWO COATS OF LATEX ENAMEL; ____.
10. PAINT MGI-OP-3A-GALVANIZED METALS, ALKYD, 3 COATS:
A. ONE COAT GALVANIZE PRIMER.
B. GLOSS: TWO COATS OF ALKYD ENAMEL; ____.
C. SEMI-GLOSS: TWO COATS OF ALKYD ENAMEL.
11. PAINT FI-OP-3A-FABRICS/INSULATION JACKETS, ALKYD, 3 COATS:
A. ONE COAT OF ALKYD PRIMER SEALER.
B. GLOSS: TWO COATS OF ALKYD ENAMEL; ________.
12. SCOPE: FINISH ALL INTERIOR AND EXTERIOR SURFACES EXPOSED TO VIEW, UNLESS FULLY FACTORY-FINISHED AND UNLESS OTHERWISE INDICATED, INCLUDING THE FOLLOWING:
A. BOTH SIDES AND EDGES OF PLYWOOD BACKBOARDS FOR ELECTRICAL AND TELECOM EQUIPMENT BEFORE INSTALLING EQUIPMENT.
B. EXPOSED SURFACES OF STEEL LINTELS AND LEDGE ANGLES.
C. MECHANICAL AND ELECTRICAL:
a. IN FINISHED AREAS, PAINT ALL INSULATED AND EXPOSED PIPES, CONDUIT, BOXES, INSULATED AND EXPOSED DUCTS, HANGERS, BRACKETS, COLLARS AND SUPPORTS, MECHANICAL EQUIPMENT, AND ELECTRICAL EQUIPMENT, UNLESS OTHERWISE INDICATED.
b. IN FINISHED AREAS, PAINT SHOP-PRIMED ITEMS.
c. ON THE ROOF AND OUTDOORS, PAINT ALL EQUIPMENT THAT IS EXPOSED TO WEATHER OR TO VIEW, INCLUDING THAT WHICH IS FACTORY-FINISHED.
d. PAINT INTERIOR SURFACES OF AIR DUCTS THAT ARE VISIBLE THROUGH GRILLES AND LOUVERS WITH ONE COAT OF FLAT BLACK PAINT TO VISIBLE SURFACES.
e. PAINT DAMPERS EXPOSED BEHIND LOUVERS, GRILLES, TO MATCH FACE PANELS.
13. DO NOT PAINT OR FINISH THE FOLLOWING ITEMS:
A. ITEMS FULLY FACTORY-FINISHED UNLESS SPECIFICALLY SO INDICATED; MATERIALS AND PRODUCTS HAVING FACTORY-APPLIED PRIMERS ARE NOT CONSIDERED FACTORY FINISHED.
B. ITEMS INDICATED TO RECEIVE OTHER FINISHES.
C. ITEMS INDICATED TO REMAIN UNFINISHED.
D. FIRE RATING LABELS, EQUIPMENT SERIAL NUMBER AND CAPACITY LABELS, AND OPERATING PARTS OF EQUIPMENT.
E. NON-METALLIC ROOFING AND FLASHING.
F. STAINLESS STEEL, ANODIZED ALUMINUM, BRONZE, TERNE, AND LEAD ITEMS.
G. FLOORS, UNLESS SPECIFICALLY SO INDICATED.
H. CERAMIC AND OTHER TILES.
I. GLASS.
J. CONCRETE MASONRY UN UTILITY, MECHANICAL, AND ELECTRICAL SPACES.
K. ACOUSTICAL MATERIALS, UNLESS SPECIFICALLY SO INDICATED.
L. CONCEALED PIPES, DUCTS, AND CONDUITS.
14. MANUFACTURERS' PRODUCT DATA FOR ADHESIVES, COMPOSITE WOOD, AND AGRIFIBER

G K A
ARCHITECTS

BUILDING ALTERATIONS

13035 ROSECRANS AVE
NORWALK CA 90650

Business Owner

ROBERT BENTON
MSA SECURITY
13035 ROSECRANS AVE
NORWALK CA 90650
(760) 644-1037 mobile
Rbenton@msasecurity.net

Landlord

ALLA RAYNETZ, JEROLD M. WARD AS TRUSTLEES OF J& J INVESTMENT TRUST
20501 VENTURA BL #325
WOODLAND HILLS, CA 91364
(808) 713-8100 mobile

Architect

Gregory Ian Korn, AIA
GKA Architects
1301 N La Brea Ave
Inglewood, CA 90302
gkorn@gka-arc.com

Fire Protection Engineer

Glen Saraduke, PE
Saraduke Technical Services
gsaraduke@gmail.com
(303) 489-1859

LICENSED CA FPE SEAL

MEP Engineer

Arash Nazari, PE
A&N Design Group Inc
21550 Oxnard Street #300
Woodland Hills, CA 91367
818-288-4361
arash@an-dg.com

LA County Fire Dept

Brent Times, Insp.
Cerritos Office / Station 30
19030 Pioneer Blvd.
Cerritos, CA 90703
562-860-8014

Building Official

Saeed Amirazizi
Building & Safety Manager
Community Development Dept
City of Norwalk
Norwalk, CA
562-929-5739
samirazizi@norwalkca.gov

No.	Description	Date
1	SD Client Review	04.17.19
2	SD Client Revs	04.19.19-05.13.19
3	Bldg & Fire Dept Submittal	05.22.19
4	M/E/P Coordination	06.19.19
5	Bldg & Fire Dept reSubmittal	06.24.19
6	Bid Document changes	06.29.19
7	SD Revisions / Control Area	08.13-08.20.19
8-11	Bldg & Fire Dept ReSubmittals	09.05.19-10.25.19
12	Bldg, Fire Dept ReSubmittals	11.08.19, 11.25.19

Project number	2019023
Date	11.25.19
Drawn by	GK
Checked by	GK

Drawing Name
SPECIFICATIONS

Drawing No.
G-003.00

NOTE: DO NOT SCALE DRAWINGS
Scale AS NOTED

ACCESSIBILITY NOTES

SITE DEVELOPMENT & ACCESSIBLE ROUTE OF TRAVEL

1. **202** ACCESSIBLE ROUTE OF TRAVEL IS DEFINED AS "A CONTINUOUS UNOBSTRUCTED PATH CONNECTING ALL ACCESSIBLE ELEMENTS AND SPACES IN AN ACCESSIBLE BUILDING OR FACILITY THAT CAN BE NEGOTIATED BY A PERSON WITH DISABILITY USING A WHEELCHAIR AND THAT IS ALSO SAFE FOR AND USABLE BY PERSONS WITH OTHER DISABILITIES, AND THAT IS CONSISTENT WITH THE DEFINITION OF "PATH OF TRAVEL."

2. **11B-206.2.1** AT LEAST ONE ACCESSIBLE ROUTE SHALL BE PROVIDED WITHIN THE SITE FROM ACCESSIBLE PARKING SPACES AND ACCESSIBLE PASSENGER LOADING ZONES; PUBLIC STREETS AND SIDEWALKS; AND PUBLIC TRANSPORTATION STOPS TO THE ACCESSIBLE BUILDING OR FACILITY ENTRANCE THEY SERVE. WHERE MORE THAN ONE ROUTE IS PROVIDED, ALL ROUTES MUST BE ACCESSIBLE.

   EXCEPTIONS:
   A. RESERVED.

   B. AN ACCESSIBLE ROUTE SHALL NOT BE REQUIRED BETWEEN SITE ARRIVAL POINTS AND THE BUILDING OR FACIILTY ENTRANCE IF THE ONLY MEANS OF ACCESS BETWEEN THEM IS VEHICULAR WAY NOT PROVIDING PEDESTRIAN ACCESS.

   C. GENERAL CIRCULATION PATHS SHALL BE PERMITTED WHEN LOCATED IN CLOSE PROXIMITY TO AN ACCESSIBLE ROUTE.

3. **11B-206.2.2** AT LEAST ONE ACCESSIBLE ROUTE SHALL CONNECT ACCESSIBLE BUILDINGS, ACCESSIBLE FACILITIES, ACCESSIBLE ELEMENTS, AND ACCESSIBLE SPACES IF THE ONLY MEANS OF ACCESS BETWEEN THEM IS A VEHICULAR WAY NOT PROVIDING PEDESTRIAN ACCESS.

4. **202** PATH OF TRAVEL IS DEFINED AS "AN IDENTIFIABLE ACCESSIBLE ROUTE WITHIN AN EXISTING SITE, BUILDING OR FACILITY BY MEANS OF WHICH A PARTICULAR AREA MAY BE APPROACHED, ENTERED AND EXITED, AND WHICH CONNECTS A ARTICULAR AREA WITH AN EXTRIOR APPROACH (INCLUDING SIDEWALKS, STREETS AND PARKING AREAS), AN ENTRANCE TO THE FACILITY, AND OTHER PARTS OF THE FACILITY. WHEN ALTERATION, STRUCTURAL REPAIRS OR ADDITIONS ARE MADE TO EXISTING BUILDINGS OR FACILITIES, THE TERM "PATH OF TRAVEL" ALSO INCLUDES THE TOILET AND BATHING FACILITIES, TELEPHONES, DRINKING FOUNTAINS AND SIGNS SERVING THE AREA OF WORK.

5. **11B-208.1 PARKING SPACES, GENERAL.** WHERE PARKING SPACES ARE PROVIDED, PARKING SPACES SHALL BE PROVIDED IN ACCORDANCE WITH SECTION 11B-208.

   EXCEPTION: PARKING SPACES USED EXCLUSIVELY FOR BUSES, TRUCKS, OTHER DELIVERY VEHICLES, OR VEHICULAR IMPOUND SHALL NOT BE REQUIRED TO COMPLY WITH SECTION 11B-208 PROVIDED THAT LOTS ACCESSED BY THE PUBLIC ARE PROVIDED WITH A PASSENGER LOADING ZONE COMPLYING WITH SECTION 11B-503.

RAMPS (EXTERIOR OR INTERIOR)

1. **202** A RAMP IS DEFINED AS "A WALKING SURFACE THAT HAS A RUNNING SLOPE STEEPER THAT ONE UNIT VERTICAL IN 20 UNITS HORIZONTAL (5 PERCENT SLOPE)."

2. **11B-405.2 SLOPE.** RAMP RUNS SHALL HAVE A RUNNING SLOPE NOT STEEPER THAN 1:12.

   EXCEPTION: RESERVED

3. **11B-405.3 CROSS SLOPE.** CROSS SLOPE OF RAMP RUNS SHALL NOT BE STEEPER THAN 1:48

4. **11B-405.5 CLEAR WIDTH.** THE CLEAR WIDTH OF A RAMP RUN SHALL BE 48 INCHES (1219 MM) MINIMUM.

   EXCEPTIONS:
   A. WITHIN EMPLOYEE WORK AREAS, THE REQUIRED CLEAR WIDTH OF RAMPS THAT AREA A PART OF COMMON USE CIRCULATION PATHS SHALL BE PERMITTED TO BE DECREASED BY WORK AREA EQUIPMENT PROVIDED THAT THE DECREASE IS ESSENTIAL TO THE FUNCTION OF THE WORK BEING PERFORMED.

   B. HANDRAILS MAY PROJECT INTO THE REQUIRED CLEAR WIDTH OF THE RAMP AT EACH SIDE 3 1/2 INCHES MAXIMUM AT THE HANDRAIL HEIGHT.

   C. THE CLEAR WIDTH OF RAMPS IN RESIDENTIAL USES SERVING AN OCCUPANT LOAD OF FIFTY OR LESS SHALL BE 36 INCHES MINIMUM BETWEEN HANDRAILS.

5. **1010.6.1 WIDTH.** THE MINIMUM WIDTH OF A MEANS OF EGRESS RAMP SHALL NOT BE LESS THAT THAT REQUIRED FOR CORRIDORS BY SECTION 1018.2. THE CLEAR WIDTH OF A RAMP BETWEEN HANDRAILS, IF PROVIDED, OR OTHER PERMISSIBLE PROJECTIONS SHALL BE 36 INCHES (914 MM) MINIMUM.

6. **1018.2 WIDTH**. THE MINIMUM WIDTH OF CORRIDORS SPECIFIED IN TABLE 1018.2 SHALL BE AS DETERMINED IN SECTION 1005.1

OCCUPANCY	WIDTH (MINIMUM)
ANY FACILITIES NOT LISTED BELOW	44 INCHES
ACCESS TO AND UTILIZATION OF MECHANICAL, PLUMBING OR ELECTRICAL SYSTEMS OR EQUIPMENT	24 INCHES
WITH A REQUIRED OCCUPANCY CAPACITY LESS THAN 50	36 INCHES
WITHIN A DWELLING UNIT	36 INCHES
IN GROUP E WITH CORRIDOR HAVING A REQUIRED CAPACITY OF 100 OR MORE	72 INCHES
IN CORRIDORS AND AREAS SERVING GURNEY TRAFFIC IN OCCUPANCIES WHERE PATIENTS RECEIVE OUTPATIENT MEDICAL CARE, WHICH CAUSES THE PATIENT TO BE INCAPABLE OF SELF-PRESERVATION	72 INCHES
GROUP I-2 IN AREAS WHERE REQUIRED FOR BED MOVEMENT	96 INCHES
CORRIDORS IN GROUP I-2 AND I-3 OCCUPANCIES SERVING ANY AREA CARING FOR ONE OR MORE NONAMBULATORY PERSONS.	96 INCHES

7. **11B-405.7 LANDINGS.** RAMPS SHALL HAVE LANDINGS AT THE TOP AND THE BOTTOM OF EACH RAMP RUN. LANDINGS SHALL COMPLY WITH SECTION 11B-405.7.

8. **11B-405.7.1 SLOPE.** LANDINGS SHALL COMPLY WITH SECTION 11B-302. CHANGES IN LEVEL ARE NOT PERMITTED.

   EXCEPTION: SLOPES NOT STEEPER THAN 1:48 SHALL BE PERMITTED

ACCESSIBILITY NOTES (CONT.)

9. **11B-405.7.2 WIDTH.** THE LANDING CLEAR WIDTH SHALL BE AT LEAST AS WIDE AS THE WIDEST RAMP RUN LEADING TO THE LANDING.

   11B-405.7.2.1 TOP LANDINGS SHALL BE 60 INCHES (1524 MM) WIDE MINIMUM.

10. **11B-405.7.3 LENGTH.** THE LANDING CLEAR LENGTH SHALL BE 60 INCES (1524 MM) LONG MINIMUM.

    11B-405.7.3.1 BOTTOM LANDINGS SHALL EXTEND 72 INCHES (1829 MM) MINIMUM IN THE DIRECTION OF RAMP RUN.

11. **11B-405.7.4 CHANGE IN DIRECTION.** RAMPS THAT CHANGE DIRECTION BETWEEN RUNS AT LANDINGS SHALL HAVE A CLEAR LANDING 60 INCHES (1525MM) MINIMUM BY 72 INCHES (1829 MM) MINIMUM IN THE DIRECTION OF DOWNWARD TRAVEL FROM THE UPPER RAMP RUN.

12. **11B-405.7.5 DOORWAYS.** WHERE DOORWAYS ARE LOCATED ADJACENT TO A RAMP LANDING, MANEUVERING CLEARANCES REQUIRED BY SECTIONS 11B-404.2.4 AND 11B-404.3.2 SHALL BE PERMITTED TO OVERLAP THE REQUIRED LANDING AREA. DOORS, WHEN FULLY OPEN, SHALL NOT REDUCE THE REQUIRED RAMP LANDING WIDTH BY MORE THAN 3 INCHES. DOORS, IN ANY POSITION , SHALL NOT REDUCE THE MINIMUM DIMENSION OF THE RAMP LANDING TO LESS THAN 42 INCHES.

13. **1010.9 HANDRAILS.** RAMPS WITH A RISE GREATER THAN 6 INCHES (152MM) SHALL HAVE HANDRAILS ON BOTH SIDES. HANDRAILS SHALL COMPLY WITH SECTION 1012.

    EXCEPTION: HANDRAILS FOR RAMPED AISLES PROVIDED IN ACCORDANCE WITH SECTION 1028.13.

14. **11B-505.2 WHERE REQUIRED.** HANDRAILS SHALL BE PROVIDED ON BOTH SIDES OF STAIRS AND RAMPS.

    EXCEPTIONS:
    1. IN ASSEMBLY AREAS, HANDRAILS SHALL NOT BE REQUIRED ON BOTH SIDES OF AISLE RAMPS WHERE A HANDRAIL IS PROVIDED AT EITHER SIDE OR WITHIN THE AISLE WIDTH.

    2. CURB RAMPS DO NOT REQUIRE HANDRAILS.

    3. AT DOOR LANDINGS, HANDRAILS ARE NOT REQUIRED WHEN THE RAMP RUN IS LESS THAN 6 INCHES (152 MM) IN RISE OR 72 INCHES (1829 MM) IN LENGTH.

15. **11B-505.3 CONTINUITY.** HANDRAILS SHALL BE CONTINUOUS WITHIN THE FULL LENGTH OF EACH STAIR FLIGHT OR RAMP RUN. INSIDE HANDRAILS ON SWITCH BACK OR DOGLEG STAIRS AND RAMPS SHALL BE CONTINUOUS BETWEEN FLIGHTS OR RUNS.

    EXCEPTIONS: IN ASSEMBLY AREAS, RAMP HANDRAILS ADJACENT TO SEATING OR WITHIN THE AISLE WIDTH SHALL NOT BE REQUIRED TO BE CONTINUOUS IN AISLES SERVING SEATING.

16. **11B-505.4 HEIGHT.** TOP OF GRIPPING SURFACES OF HANDRAILS SHALL BE 34 INCHES (864 MM) MINIMUM AND 38 INCHES (965 MM) MAXIMUM VERTICALLY ABOVE WALKING SURFACES, STAIR NOSINGS, AND RAMP SURFACES. HANDRAILS SHALL BE AT A CONSISTENT HEIGHT ABOVE WALKING SURFACES, STAIR NOSINGS, AND RAMP SURFACES.

17. **11B-505.5 CLEARANCE.** CLEARANCE BETWEEN HANDRAIL GRIPPING SURFACES AND ADJACENT SURFACES SHALL BE 1 1/2 INCHES (38 MM) MINIMUM. HANDRAILS MAY BE LOCATED IN A RECESS IF THE RECESS IS 3 INCHES (76 MM) MAXIMUM DEEP AND 18 INCHES (457 MM) MINIMUM CLEAR ABOVE THE TOP OF THE HANDRAIL.

18. **11B-505.7.1 CIRCULAR CROSS SECTION.** HANDRAIL GRIPPING SURFACES WITH A CIRCULAR CROSS SECTION SHALL HAVE AN OUTSIDE DIAMETER OF 1 1/4 INCHES (32 MM) MINIMUM AND 2 INCHES (51 MM) MAXIMUM.

19. **11B-505.10.1 TOP AND BOTTOM EXTENSION AT RAMPS.** RAMP HANDRAILS SHALL EXTEND HORIZONTALLY ABOVE THE LANDING FOR 12 INCHES (305 MM) MINIMUM BEYOND THE TOP AND BOTTOM OF RAMP RUNS. EXTENSIONS SHALL RETURN TO A WALL, GUARD, OR THE LANDING SURFACE, OR SHALL BE CONTINUOUS TO THE HANDRAIL OF AN ADJACENT RAMP RUN.

20. **11B-505.8 SURFACES.** HANDRAIL GRIPPING SURFACES AND ANY SURFACES ADJACENT TO THEM SHALL BE FREE OF SHARP OR ABRASIVE ELEMENTS AND SHALL HAVE ROUNDED EDGES.

21. **11B-405.9.2 CURB OR BARRIER.** A CURB, 2 INCHES (51 MM) HIGH MINIMUM, OR BARRIER SHALL BE PROVIDED THAT PREVENTS THE PASSAGE OF A 4 NCH (102 MM) DIAMETER SPHERE, WHERE ANY PORTION OF THE SPHERE IS WITHIN 4 INCHES (102 MM) OF THE FINISH FLOOR OR GROUND SURFACE. TO PREVENT WHEEL ENTRAPMENT, THE CURB OR BARRIER SHALL PROVIDE A CONTINUOUS AND UNINTERRUPTED BARRIER ALONG THE LENGTH OF THE RAMP.

ENTRANCES AND EXITS

1. **11B-404.2.3 CLEAR WIDTH.** DOOR OPENINGS SHALL PROVIDE A CLEAR WIDTH OF 32 INCHES (813 MM) MINIMUM. CLEAR OPENINGS OF DOORWAYS WITH SWINGING DOORS SHALL BE MEASURED BETWEEN THE FACE OF THE DOOR AND THE TOP, WITH THE DOOR OPEN 90 DEGREES. OPENINGS MORE THAN 24 INCHES (610 MM) DEEP SHALL PROVIDE A CLEAR OPENING OF 36 INCHES (914 MM) MINIMUM. THERE SHALL BE NO PROJECTIONS INTO THE REQUIRED CLEAR OPENING WIDTH LOWER THAN 34 INCHES (864 MM) ABOVE THE FINISH FLOOR OR GROUND. PROJECTIONS INTO THE CLEAR OPENING WIDTH BETWEEN 34 INCHES (864 MM) AND 80 INCHES (2032 MM) ABOVE THE FINISH FLOOR OR GROUND SHALL NOT EXCEED 4 INCHES (102 MM).

   EXCEPTIONS:
   1. IN ALTERATIONS, A PROJECTION OF 5/8 INCHE (15.9 MM) MAXIMUM INTO THE REQUIRED CLEAR WIDTH SHALL BE PERMITTED FOR THE LATCH SIDE STOP.
   2. DOOR CLOSERS AND DOOR STOPS SHALL BE PERMITTED TO BE 78 INCHES (1981 MM) MINIMUM ABOVE THE FINISH FLOOR OR GROUND.

ACCESSIBILITY NOTES (CONT.)

DOORS

1. **11B-309.4 OPERATION.** OPERABLE PARTS SHALL BE OPERABLE WITH ONE HAND AND SHALL NOT REQUIRE TIGHT GRASPING, PINCHING, OR TWISTING OF THE WRIST. THE FORCE REQUIRED TO ACTIVATE OPERABLE PARTS SHALL BE 5 POUNDS (22.2 N) MAXIMUM.

   EXCEPTION: GAS PUMP NOZZLES SHALL NOT BE REQUIRED TO PROVIDE OPERABLE PARTS THAT HAVE AN ACTIVATING FORCE OF 5 POUNDS (22.2 N) MAXIMUM.

2. **11B-404.2.7 DOOR AND GATE HARDWARE.** HANDLES, PULLS, LATCHES, LOCKS, AND OTHER OPERABLE PARTS ON DOORS AND GATES SHALL COMPLY WITH SECTION 11B-309.4. OPERABLE PARTS OF SUCH HARDWARE SHALL BE 34 INCHES (864 MM) MINIMUM AND 44 INCHES (1118 MM) MAXIMUM ABOVE THE FINISH FLOOR OR GROUND. WHERE SLIDING DOORS ARE IN THE FULLY OPEN POSITION, OPERATING HARDWARE SHALL BE EXPOSED AND USABLE FROM BOTH SIDES.

   EXCEPTIONS:
   1. EXISTING LOCKS SHALL BE PERMITTED IN ANY LOCATION AT EXISTING GLAZED DOORS WITHOUT STILES, EXISTING OVERHEAD ROLLING DOORS OR GRILLES, AND SIMILAR EXISTING DOORS OR GRILLES THAT ARE DESIGNED WITH LOCKS THAT ARE ACTIVATED ONLY AT THE TOP OR BOTTOM RAIL.

   2. ACCESS GATES IN BARRIER WALLS AND FENCES PROTECTING POOLS, SPAS, AND HOT TUBS SHALL BE PERMITTED TO HAVE OPERABLE PARTS OF THE RELEASE OF LATCH ON SELF-LATCHING DEVICES AT 54 INCHES (1372 MM) MAXIMUM ABOVE THE FINISH FINISH FLOOR OR GROUND PROVIDED THE SELF-LATCHING DEVICES ARE NOT ALSO SELF-LOCKING DEVICES AND OPERATED BY MEANS OF A KEY, ELECTRONIC OPENER, OR INTEGRAL COMBINATION LOCK.

3. **1008.1.9.5 UNLATCHING**. THE UNLATCHING OF ANY DOOR OR LEAF SHALL NOT REQUIRE MORE THAN ONE OPERATION.

   EXCEPTIONS:
   1. PLACES OF DETENTION OR RESTRAINT.
   2. WHERE MANUALLY OPERATED BOLT LOCKS ARE PERMITTED BY SECTION 1008.1.9.4.
   3. DOORS WITH AUTOMATIC FLUSH BOLTS AS PERMITTED BY SECTION 1008.1.9.3, EXCEPTION 3.
   4. DOORS FROM INDIVIDUAL DWELLING UNITS AND SLEEPING UNITS OF GROUP R OCCUPANCIES AS PERMITTED BY SECTION 1008.1.9.3, EXCEPTION 4

4. **1008.1.9.2 HARDWARE HEIGHT.** DOOR HANDLES, PULLS, LATCHES, LOCKS AND OTHER OPERATING DEVICES SHALL BE INSTALLED 34 INCHES (864 MM) MINIMUM AND 48 INCHES (1219 MM) MAXIMUM ABOVE THE FINISHED FLOOR. LOCKS USED ONLY FOR SECURITY PURPOSES AND NOT USED FOR NORMAL OPERATION ARE PERMITTED AT ANY HEIGHT.

   EXCEPTION: ACCESS DOORS OR GATES IN BARRIER WALLS AND FENCES PROTECTING POOLS, SPAS AND HOT TUBS SHALL BE PERMITTED TO HAVE OPERABLE PARTS OF THE RELEASE OF LATCH ON SELF-LATCHING DEVICES AT 54 INCHES (1370 MM) MAXIMUM ABOVE THE FINISHED FLOOR OR GROUND, PROVIDED THE SELF-LATCHING DEVICES ARE NOT ALSO SELF-LOCKING DEVICES OPERATED BY MEANS OF KEY, ELECTRONIC OPENER OR INTEGRAL COMBINATION LOCK.

5. **1008.1.1 SIZE OF DOORS.** THE MINIMUM WIDTH OF EACH DOOR OPENING SHALL BE SUFFICIENT FOR THE OCCUPANT LOAD THEREOF AND SHALL PROVIDE A CLEAR WIDTH OF 32 INCHES (813 MM). CLEAR OPENINGS OF DOORWAYS WITH SWINGING DOORS SHALL BE MEASURED BETWEEN THE FACE OF THE DOOR AND THE STOP, WITH THE DOOR OPEN 90 DEGREES (1.57 RAD). WHERE THIS SECTION SREQUIRES A MINIMUM CLEAR WIDTH OF 32 INCHES (813 MM) AND A DOOR OPENING INCLUDES TWO DOOR LEAVES WITHOUT A MULLION, ONE LEAF SHALL PROVIDE A CLEAR OPENING WIDTH OF 32 INCHES (813 MM). THE MAXIMUM WIDTH OF A SWINGING DOOR LEAF SHALL BE 48 INCHES (1219 MM) NOMINAL. MEANS OF EGRESS DOORS IN A GROUP I-2 OR I-2.1 OCCUPANCY USED FOR THE MOVEMENT OF BEDS AND LITTER PATIENTS SHALL PROVIDE A CLEAR WIDTH NOT LESS THAN 44 INCHES (1054 MM). THE HEIGHT OF DOOR OPENINGS SHALL NOT BE LESS THAN 80 INCHES (2032 MM).

ACCESSIBILITY NOTES (CONT.)

6. **11B-404.2.4 MANEUVERING CLEARANCES.** MINIMUM MANEUVERING CLEARANCES AT DOORS AND GATES SHALL COMPLY WITH SECTION 11B-404.2.4. MANEUVERING CLEARANCES SHALL EXTEND THE FULL WIDTH OF THE DOORWAY AND THE REQUIRED LATCH SIDE OR HINGE SIDE CLEARANCE.

   EXCEPTION: RESERVED.

7. **11B-404.2.4.1 SWINGING DOORS AND GATES.** SWINGING DOORS AND GATES SHALL HAVE MANEUVERING CLEARANCES COMPLYING WITH TABLE 11B-404.2.4.1.

8. **11B-404.2.4.4 FLOOR OR GROUND SURFACE.** FLOOR OR GROUND SURFACE WITHIN REQUIRED MANEUVERING CLEARANCES SHALL COMPLY WITH SECTION 11B-302. CHANGES IN LEVEL ARE NOT PERMITTED.

   EXCEPTIONS:
   1. SLOPES NOT STEEPER THAN 1:48 SHALL BE PERMITTED.
   2. CHANGES IN LEVEL AT THRESHOLDS COMPLYING WITH SECTION 11B-404.2.5 SHALL BE PERMITTED.

9. **11B-404.2.5 THRESHOLDS.** THRESHOLDS, IF PROVIDED AT DOORWAYS, SHALL BE 1/2 INCH (12.7 MM) HIGH MAXIMUM. RAISED THRESHOLDS AND CHANGES IN LEVEL AT DOORWAYS SHALL COMPLY WITH SECTIONS 11B-302 AND 11B-303.

   EXCEPTION: RESERVED.

10. **11B-404.2.1 DOOR AND GATE SURFACES.** SWINGING DOOR AND GATE SURFACES WITHIN 10 INCHES (254 MM) OF THE FINISH FLOOR OR GROUND MEASURED VERTICALLY SHALL HAVE A SMOOTH SURFACE ON THE PUSH SIDE EXTENDING THE FULL WIDTH OF THE DOOR OR GATE. PARTES CREATING HORIZONTAL OR VERTICAL JOINTS IN THESE SURFACES SHALL BE WITHIN 1/16 INCH (1.6 MM) OF THE SAME PLANE AS THE OTHER AND BE FREE OF SHARP OR ABRASIVE EDGES. CAVITIES CREATED BY ADDED KICK PLATE SHALL BE CAPPED.

11. **11B-404.2.9 DOOR AND GATE OPENING FORCE.** THE ORCE FOR PUSHING OR PULLING OPEN A DOOR OR GATE SHALL BE AS FOLLOWS:

    1. INTERIOR HINGED DOORS AND GATES: 5 POUNDS (22.2 N) MAXIMUM.
    2. SLIDING OR FOLDING DOORS: 5 POUNDS (22.2 N) MAXIMUM.
    3. REQUIRED FIRE DOORS: THE MINIMUM OPENING FORCE ALLOWABLE BY THE APPROPRIATE ADMINISTRATIVE AUTHORITY, NOT TO EXCEED 15 POUNDS (66.7N).
    4. EXTERIOR HINGED DOORS: 5 POUNDS (22.2 N) MAXIMUM.

    THESE FORCES DO OT APPLY TO THE FORCE REQUIRED TO RETRACT LATCH BOLTS OR DISENGAGE OTHER DEVICES THAT HOLD THE DOOR OR GATE IN A CLOSED POSITION.

12. **11B-404.2.8.1 DOOR CLOSERS AND GATE CLOSERS.** DOOR CLOSERS AND GATE CLOSERS SHALL BE ADJUSTED SO THAT FROM AN OPEN POSITION OF 90 DEGREES, THE TIME REQUIRED TO MOVE THE DOOR TO A POSITION OF 12 DEGREES FROM THE LATCH IS 5 SECONDS MINIMUM.

13. **2406.3 IDENTIFICATION OF SAFETY GLAZING.** EXCEPT AS INDICATED IN SECTION 2406.3.1, EACH PANE OF SAFETY GLAZING INSTALLED IN HAZARDOUS LOCATIONS SHALL BE IDENTIFIED BY A MANUFACTURER'S DESIGNATION SPECIFYIN WHO APPLIED THE DESIGNATION THE MANUFACTURER OR INSTALLERAND THE SAFETY GLAZING STANDARD WITH WHICH IT COMPLIES, AS WELL AS THE INFORMATION SPECIFIED IN SECTION 2403.1. THE DESIGNATION SHALL BE ACID ETCHED, SAND BLASTED, CEREAMIC FIRED, LASER ETCHED, EMBOSSED OR OF A TYPE THAT ONCE APPLIED, CANNOT BE REMOVED WITHOUT BEING DESTROYED. A LABEL AS DEFINED IN SECTION 202 AND MEETING THE REQUIREMENTS OF THIS SECTION SHALL BE PERMITTED IN LIEU OF THE MANUFACTURER'S DESIGNATION.

TYPE OF USE		MINIMUM MANEUVERING CLEARANCE	
APPROACH DIRECTION	DOOR OR GATE SIDE	PERPENDICULAR TO DOORWAY	PARALLEL TO DOORWAY (BEYOND LATCH SIDE UNLESS NOTED)
FROM FRONT	PULL	60 INCHES (1524 MM)	18 INCHES (457 MM)[1]
FROM FRONT	PUSH	48 INCHES (1219 MM)	0 INCHES (0 MM)[1]
FROM HINGE SIDE	PULL	60 INCHES (1524 MM)	36 INCHES (914 MM)
FROM HINGE SIDE	PUSH	44 INCHES (1118 MM)[2]	22 INCHES (559 MM)[2]
FROM LATCH SIDE	PULL	60 INCHES (1524 MM)	24 INCHES (610 MM)
FROM LATCH SIDE	PUSH	44 INCHES (1118 MM)[3]	24 INCHES (610 MM)

1. ADD 12 INCHES (305 MM) IF CLOSER AND LATCH ARE PROVIDED.
2. ADD 4 INCHES (102 MM) IF CLOSER AND LATCH ARE PROVIDED.
3. BEYOND HINGE SIDE
4. ADD 4 INCHES (102 MM) IF CLOSER IS PROVIDED.
5. ADD 6 INCHES (152 MM) AT EXTERIOR OF EXTERIOR DOORS.

TABLE 11B-404.2.4.1
MANEUVERING CLEARANCES AT MANUAL SWINGING DOORS AND GATES

SCALE NONE

1

GREG KORN AIA ARCHITECTS

INTERIOR ALTERATION

2525 MOORPARK RD
THOUSAND OAKS, CA 91362

Client
Andrew Mooney, Park Planner
CONEJO RECREATION & PARK DISTRICT
403 W. Hillcrest Drive
Thousand Oaks CA 91360
(805) 495-6471
amooney@crpd.org

Architect
G. Ian Korn, AIA
GKA Architects
351 Rolling Oaks Dr Ste 202
Thousand Oaks, CA 91361
gkorn@gka-arc.com
(805) 370-1300

MEP Engineer
Arash Nazari, PE
A&N Design Group Inc
21550 Oxnard Street #300
Woodland Hills, CA 91367
818-288-4361
arash@an-dg.com

Plan Examiner
TBD
City of Thousand Oaks
Building Division
2100 E Thousand Oaks Blvd
Thousand Oaks, CA 91361
(805) 449-2100

No.	Description	Date
1	Schematic Design to Client	08.07.19
2	Schematic Design to Client- Storage	08.27.19
3	Building Dept Submittal	09.23.19
4	Building Dept Corrections	10.25.19
5	Public Works Corrections	11.07.19
6	CDs to Client-Storage	01.13.20
7	CDs to Client-Storage Rev	01.21.20

Project number	2019003
Date	01.21.20
Drawn by	GK
Checked by	GK

Drawing Name
ACCESSIBILITY NOTES

Drawing No.
G-101.00

NOTE: DO NOT SCALE DRAWING
Scale AS NOTED

ACCESSIBILITY NOTES (CONT.)

14. **1008.1.2 DOOR SWING.** EGRESS DOORS SHALL BE OF THE PIVOTED OR SIDE-HINGED SWINGING TYPE.

EXCEPTIONS:
1. PRIVATE GARAGES, OFFICE AREAS, FACTORY AND STORAGE AREAS WITH AN OCCUPANT LOAD OF 10 OR LESS.
2. GROUP I-3 OCCUPANCIES USED AS A PLACE OF DETENTION.
3. CRITICAL OR INTENSIVE CARE PATIENT ROOMS WITHIN SUITES OF HEALTH CARE FACILITIES.
4. DOORS WITHIN OR SERVING A SINGLE DWELLING UNIT IN GROUPS R-2 AND R-3.
5. IN OTHER GROUP H OCCUPANCIES, REVOLVING DOORS COMPLYING WITH SECTION 1008.1.4.1.
6. IN OTHER THAN GROUP H OCCUPANCIES, HORIZONTAL SLIDING DOORS COMPLYING WITH SECTION 1008.1.4.3 ARE PERMITTED IN A MEANS OF EGRESS
7. POWER-OPERATED DOORS IN ACCORDANCE WITH SECTION 1008.1.4.2.
8. DOORS SERVING A BATHROOM WITHIN AN INDIVIDUAL SLEEPING UNIT IN GROUP R-1.
9. IN OTHER THAN GROUP H OCCUPANCIES, MANUALLY OPERATED HORIZONTAL SLIDING DOORS ARE PERMITTED IN A MEANS OF EGRESS FROM SPACES WITH N OCCUPANT LOAD OF 10 OR LESS.
10. IN I-2 AND I-2.1 OCCUPANCIES, EXIT DOORS SERVING AN OCCUPANT LOAD OF 10 OR MORE, MAY BE OF THE PIVOTED OR BALANCED TYPE.

DOORS SHALL SWING IN THE DIRECTION OF EGRESS TRAVEL WHERE SERVING A ROOM OR AREA CONTAINING AN OCCUPANT LOAD OF 50 OR MORE PERSONS OR A GROUP H OCCUPANCY. FOR GROUP L OCCUPANCIES, SEE SECTION 443.6.2.

IN A GROUP I-2 OCCUPANCY, ALL REQUIRED EXTERIOR EGRESS DOORS SHALL OPEN IN THE DIRECTION OF EGRESS REGARDLESS OF THE OCCUPANT LOAD SERVED.

15. **1008.1.9.3 LOCKS AND LATCHES.** LOCKS AND LATCHES SHALL BE PERMITTED TO PREVENT OPERATION OF DOORS WHERE ANY OF THE FOLLOWING EXISTS:

1. PLACES OF DETENTION OR RESTRAINT.
2. IN BUILDINGS IN OCCUPANCY GROUP A HAVING AN OCCUPANT LOAD OF 300 OR LESS, GROUPS B, F, M AND S, AND IN PLACES OF RELIGIOUS WORSHIP, THE MAIN EXTERIOR DOOR OR DOORS ARE PERMITTED TO BE EQUIPPED WITH KEY-OPERATED LOCKING DEVICES FROM THE EGRESS SIDE PROVIDED:
   2.1 THE LOCKING DEVICE IS READILY DISTINGUISHABLE AS LOCKED;
   2.2 A READILY VISIBLY DURABLE SIGN IS POSTED ON THE EGRESS SIDE ON OR ADJACENT TO THE DOOR STATING: THIS DOOR TO REMAIN UNLOCKED WHEN BUILDING IS OCCUPIED. THE SIGN SHALL BE IN LETTERS 1 INCH HIGH ON A CONTRASTING BACKGROUND; AND
   2.3 THE USE OF THE KEY-OPERATED LOCKING DEVICE IS REVOKABLE BY THE BUILDING OFFICIAL FOR DUE CAUSE.

16. **11B-404.2.5 THRESHOLDS.** THRESHOLDS, IF PROVIDED AT DOORWAYS, SHALL BE 1/2 INCH (12.7 MM) HIGH MAXIMUM. RAISED THRESHOLDS AND CHANGES IN LEVEL AT DOORWAYS SHALL COMPLY WITH SECTIONS 11B-302 AND 11B-303.

FLOORS AND LEVELS

1. **202.** LEVEL AREA IS DEFINED AS "A SPECIFIED SURFACE THAT DOES NOT HAVE A SLOPE IN ANY DIRECTION EXCEEDING $\frac{1}{4}$ INCH IN ONE FOOT FROM THE HORIZONTAL (2.083% GRADIENT.)"

1. **11B-206.2.2 WITHIN A SITE.** AT LEAST ONE ACCESSIBLE ROUTE SHALL CONNECT ACCESSIBLE BUILDINGS, ACCESSIBLE FACILITIES , ACCESSIBLE ELEMENTS, AND ACCESSIBLE SPACES THAT ARE ON THE SAME SITE.

2. **11B-302.1 GENERAL.** FLOOR AND GROUND SURFACES SHALL BE STABLE, FIRM, AND SLIP RESISTANT AND SHALL COMPLY WITH SECTION 11B-302.

3. **11B-303.2 VERTICAL.** CHANGES IN LEVEL OF 1/4 INCHE HIGH MAXIMUM SHALL BE PERMITTED TO BE VERTICAL AND WITHOUT EDGE TREATMENT.

4. **11B-303.3 BEVELED.** CHANGES IN LEVEL BETWEEN 1/4 INCH HIGH MINIMUM AND 1/2 INCH HIGH MAXIMUM SHALL BE BEVELED WITH A SLOPE NOT STEEPER THAN 1:2.

5. **11B-303.4 RAMPS.** CHANGES IN LEVEL GREATER THAN 1/2 INCH HIGH SHALL BE RAMPED, AND SHALL COMPLY WITH SECTION 11B-405 OR 11B-406.

6. **11B-302.2 CARPET.** CARPET OR CARPET TILE SHALL BE SECURELY ATTACHED AND SHALL HAVE A FIRM CUSHION, PAD, OR BACKING OR NO CUSHION OR PAD. CARPET OR CARPET TILE SHALL HAVE A LEVEL LOOP, TEXTURED LOOP, LEVEL CUT PILE, LEVEL CUT/UNCUT PILE TEXTURE. PILE HEIGHT SHALL BE 1/2 INCH MAXIMUM. EXPOSED EDGES OF CARPET SHALL BE FASTENED TO FLOOR SURFACES AND SHALL HAVE TRIM ON THE ENTIRE LENGTH OF THE EXPOSED EDGE. CARPET EDGE TRIM SHALL COMPLY WITH SECTION 11B-303.

7. **11B-302.3 OPENINGS.** OPENINGS IN FLOOR OR GROUND SURFACES SHALL NOT ALLOW PASSAGE OF A SPHERE MORE THAN 1/2 INCH DIAMETER EXCEPT AS ALLOWED IN SECTIONS 11B-407.4.3, 11B-409.4.3, 11B-410.4, 11B-810.5.3 AND 11B-810.10. ELONGATED OPENINGS SHALL BE PLACED SO THAT THE LONG DIMENSION IS PERPENDICULAR TO THE DOMINANT DIRECTION OF TRAVEL.

CORRIDORS & AISLES

1. **11B-403.1 GENERAL.** WALKING SURFACES THAT AREA A PART OF AN ACCESSIBLE ROUTE SHALL COMPLY WITH SECTION 11B-403.

2. **11B-403.5 CLEARANCES.** WALKING SURFACES SHALL PROVIDE CLEARANCES COMPLYING WITH SECTION 11B-403.5.

EXCEPTION: WITHIN EMPLOYEE WORK AREA, CLEARANCES ON COMMON USE CIRCULATION PATHS SHALL BE PERMITTED TO BE DECREASED BY WORK AREA EQUIPMENT PROVIDED THAT THE DECREASE IS ESSENTIAL TOTHE FUNCTION OF THE WORK BEING PERFORMED.

11B-403.5.1 CLEAR WIDTH. EXCEPT AS PROVIDED IN SECTIONS 11B-403.5.2 AND 11B-403.5.3, THE CLEAR WIDTH OF WALKING SURFACES SHALL BE 36 INCHES MINIMUM.

ACCESSIBILITY NOTES (CONT.)

EXCEPTIONS:
1. THE CLEAR WIDTH SHALL BE PERMITTED TO BE REDUCED TO 32 INCHES MINIMUM FOR A LENGTH OF 24 INCHES MAXIMUM PROVIDED THAT REDUCED WIDTH SEGMENTS ARE SEPARATED BY SEGMENTS THAT ARE 48 INCHES LONG MINIMUM AND 36 INCHES WIDE MINIMUM.
2. THE CLEAR WIDTH FOR WALKING SURFACES IN CORRIDORS SERVING AN OCCUPANT LOAD OF 10 OR MORE SHALL BE 44 INCHES MINIMUM.
3. THE CLEAR WIDTH FOR SIDEWALKS AND WALKS SHALL BE 48 INCHES MINIMUM. WHEN, BECAUSE OF RIGHT-OF-WAY RESTRICTIONS, NATURAL BARRIERS OR OTHER EXISTING CONDITIONS, THE ENFORGING AGENCY DETERMINES THAT COMPLIANCE WITH THE 48 INCH CLEAR SIDEWALK WIDTH WOULD CREATE AN UNREASONABLE HARDSHIP, THE CLEAR WIDTH MAY BE REDUCED TO 36 INCHES.
4. THE CLEAR WIDTH FOR AISLES SHALL BE 36 INCHES MINIMUM IF SERVING ELEMENTS ON ONLY ONE SIDE, AND 44 INCHES MINIMUM IF SERVING ELEMENTS ON BOTH SIDES.
5. THE CLEAR WIDTH FOR ACCESSIBLE ROUTES TO ACCESSIBLE TOILET COMPARTMENTS SHALL BE 44 INCHES EXCEPT FOR DOOR-OPENING WIDTHS AND DOOR SWINGS.

3. **11B-403.5.3 PASSING SPACES.** AN ACCESSIBLE ROUTE WITH A CLEAR WIDTH LESS THAN 60 INCHES SHALL PROVIDE PASSING SPACES AT INTERVALS OF 200 FEET MAXIMUM. PASSING SPACES SHALL BE EITHER: A SPACE 60 INCHES MINIMUM BY 60 INCHES MINIMUM; OR, AN INTERSECTION OF TWO WALKING SURFACES PROVIDING A T-SHAPED SPACE COMPLYING WITH SECTION 11B-304.3.2 WHERE THE BASE AND ARMS OF THE T-SHAPED SPACE EXTEND 48 INCHES MINIMUM BEYOND THE INTERSECTION.

4. **1017.1 AISLES GENERAL.** AISLES AND AISLE ACCESSWAYS SERVING AS A PORTION OF THE EXIT ACCESS IN THE MEANS OF EGRESS SYSTEM SHAL COMPLY WITH THE REQUIREMENTS OF THIS SECTION. AISLES OR AISLE ACCESSWAYS SHALL BE PROVIDED FROM ALL OCCUPIED PORTIONS OF THE EXIT ACCESS WHICH CONTAIN SEATS, TABLES, FURNISHINGS, DISPLAYS AND SIMILAR FIXTURES OR EQUIPMENT. THE REQUIRED WIDTH OF AISLES SHALL BE UNOBSTRUCTURED.

EXCEPTION: ENCROACHMENTS COMPLYING WITH SECTION 1005.7

SPACE ALLOWANCE AND REACH RANGES

1. **11B-305.1 CLEAR FLOOR OR GROUND SPACE GENERAL.** CLEAR FLOOR OR GROUND SPACE SHALL COMPLY WITH SECTION 11B-305.

2. **11B-305.3 SIZE.** THE CLEAR FLOOR OR GROUND SPACE SHALL BE 30 INCHES MINIMUM BY 48 INCHES MINIMUM.

3. **11B-305.4 KNEE AND TOE CLEARANCE.** UNLESS OTHERWISE SPECIFIED, CLEAR FLOOR OR GROUND SPACE SHALL BE PERMITTED TO INCLUDE KNEE AND TOE CLEARANCE COMPLYING WITH SECTION 11B-306.

4. **11B-305.6 APPROACH.** ONE FULL UNOBSTRUCTED SIDE OF THE CLEAR FLOOR OR GROUND SPACE SHALL ADJOIN AN ACCESSIBLE ROUTE OR ADJOIN ANOTHER CLEAR FLOOR OR GROUND SPACE. CLEAR FLOOR OR GROUND SPACE MAY OVERLAP AN ACCESSIBLE ROUTE, UNLESS SPECIFICALLY PROHIBITED ELSEWHERE IN THIS CHAPTER.

5. **11B-305.7 MANEUVERING CLEARANCE.** WHERE A CLEAR FLOOR OR GROUND SPACE IS LOCATED IN AN ALCOVE OR OTHERWISE CONFINED ON ALL OR PART OF THREE SIDES, ADDITIONAL MANEUVERING CLEARANCE SHALL PROVIDE IN ACCORDANCE WITH SECTIONS 11B-305.7.1 AND 11B-305.7.2.
   5.1. **11B-305.7.1 FORWARD APPROACH.** ALCOVES SHALL BE 36 INCHES WIDE MINIMUM WHERE THE DEPTH EXCEEDS 24 INCHES.
   5.2. **11B-305.7.2 PARALLEL APPROACH.** ALCOVES SHALL BE 60 INCHES WIDE MINIMUM WHERE THE DEPTH EXCEEDS 15 INCHES.

6. **11B-304.1 TURNING SPACE GENERAL.** TURNING SPACE SHALL COMPLY WITH SECTION 11B-304

7. **11B-304.3 SIZE.** TURNING SPACE SHALL COMPLY WITH SECTION 11B-304.3.1 OR 11B-304.3.2.
   7.1. **11B-304.3.1 CIRCULAR SPACE.** THE TURNING SPACE SHALL BE A SPACE OF 60 INCHES DIAMETER MINIMUM. THE SPACE SHALL BE PERMITTED TO INCLUDE KNEE AND TOE CLEARANCE COMPLYING WITH SECTION 11B-306
   7.2. **11B-304.3.2 T-SHAPED SPACE.** THE TURNING SPACE SHALL BE A T-SHAPED SPACE WITHIN A 60 INCH SQUARE MINIMUM WITH ARMS AND BASE 36 INCHES WIDE MINIMUM. EACH ARM OF THE T SHALL BE CLEAR OF OBSTRUCTIONS 12 INCHES MINIMUM IN EACH DIRECTION AND THE ASE SHALL BE CLEAR OF OBSTRUCTIONS 24 INCHES MINIMUM. THE SPACE SHALL BE PERMITTED TO INCLUDE KNEE AND TOE CLEARANCE COMPLYING WITH SECTION 11B-306 ONLY AT THE END OF EITHER THE BASE OR ONE ARM.

8. **11B-308.2 FORWARD REACH.**
   8.1. **11B-308.2.1 UNOBSTRUCTED.** WHERE A FORWARD REACH IS UNOBSTRUCTED, THE HIGH FORWARD REACH SHALL BE 48 INCHES MAXIMUM AND THE LOW FORWARD REACH SHALL BE 15 INCHES MINIMUM ABOVE THE FINISH FLOOR OR GROUND.
   8.2. **11B-308.2.2 OBSTRUCTED HIGH REACH.** WHERE A HIGH FORWARD REACH IS OVER AN OBSTRUCTION, THE CLEAR FLOOR SPACE SHALL EXTEND BENEATH THE ELEMENT FOR A DITANCE NOT LESS THAN THE REQUIRED REACH DEPTH OVER THE OBSTRUCTION. THE HIGH FORWARD REACH SHALL BE 48 INCHES MAXIMUM WHERE THE REACH DEPTH IS 20 INCHES MAXIMUM. WHERE THE REACH DEPT EXCEEDS 20 INCHES, THE HIGH FORWARD REACH SHALL BE 44 INCHES MAXIMUM AND THE REACH DEPTH SHALL BE 25 INCHES MAXIMUM.

9. **11B-308.3 SIDE REACH.**
   9.1. **11B-308.3.1 UNOBSTRUCTED.** WHERE A CLEAR FLOOR OR GROUND SPACE ALLOWS A PARALLEL APPROACH TO AN ELEMENT AND THE SIDE REACH IS UNOBSTRUCTED, THE HIGH SIDE REACH SHALL BE 48 INCHES MAXIMUM AND HTE LOW SIDE REACH SHALL BE 15 INCHES MINIMUM ABOVE THE FINISH FLOOR OR GROUND.

EXCEPTIONS:
1. AN OBSTRUCTION SHALL BE PERMITTED BETWEEN THE CLEAR FLOOR OR GROUND SPACE AND THE ELEMENT WHERE THE DEPTH OF THE OBSTRUCTIONIS 10 INCHES MAXIMUM.
2. OPERABLE PARTS OF FUEL DISPENSERS SHALL BE PERMITTED TO E 54 INCHES MAXIMUM MEASURED FROM THE SURFACE OF THE VEHICULAR WAY WHERE FUEL DISPENSERS ARE INSTALLED ON EXISTING CURBS.

ACCESSIBILITY NOTES (CONT.)

9.2 **11B-308.3.2 OBSTRUCTED HIGH REACH.** WHERE A CLEAR FLOOR OR GROUND SPACE ALLOWS A PARALLEL APPROACH TO AN ELEMENT AND THE HIGH SIDE REACH IS OVER AN OBSTRUCTION, THE HEIGHT OF THE OBSTRUCTION SHALL BE 34 INCHES MAXIMUM AND THE DEPTH OF THE OBSTRUCTION SHALL BE 24 INCHES MAXIMUM. THE HIGH SIDE REACH SHALL BE 48 INCHES MAXIMUM FOR A REACH DEPTH OF 10 INCHES MAXIMUM. WHERE THE EACH DEPTH EXCEEDS 10 INCHES, THE HIGH SIDE RACH SHALL BE 46 INCHES MACIMUM FOR A REACH DEPTH OF 24 INCHES MAXIMUM.

EMPLOYEE WORK AREAS AND WORK STATIONS

1. **202.** WORK STATION IS DEFINED AS "A DEFINED SPACE OR AN INDEPENDENT PRINCIPAL PIECE OF EQUIPMENT USING HPM WITHIN A FABRICATION AREA WHERE A SPECIFIC FUNCTION, LABORATORY PROCEDURE OR RESEARCH ACTIVITY OCCURS. APPROVED OR LISTED HAZARDOUS MATERIALS STORAGE CABINETS, FLAMMABLE LIQUID STORAGE CABINETS OR GAS CABINETS SERVING A WORKSTATION ARE INCLUDED AS PART OF THE WORKSTATION. A WORKSTATION IS ALLOWED TO CONTAIN VENTILATION EQUIPMENT, FIRE PROTECTION DEVICES, DETECTION DEVICES, ELECTRICAL DEVICES AND OTHER PROCESSING AND SCIENTIFIC EQUIPMENT"

2. **11B-206.2.8 EMPLOYEE WORK AREAS.** COMMON USE CIRCULATION PATHS WITHIN EMPLOYEE WORK AREAS SHALL COMPLY WITH SECTION 11B-402.

EXCEPTIONS:
1. RESERVED.
2. COMMON USE CIRCULATION PATHS LOCATED WITHIN EMPLOYEE WORK AREAS THAT ARE AN INTEGRAL COMPONENT OF WORK AREA EQUIPMENT SHALL NOT BE REQUIRED TO COMPLY WITH SECTION 11B-402.
3. COMMON USE CIRCULATION PATHS LOCATED WITHIN EXTERIR EMPLOYEE WORK AREAS THAT ARE FULLY EXPOSED TO THE WEATHER SHALL OT BE REQUIRED TO COMPLY WITH SECTION 11B-402

FIXED OR BUILT-IN SEATING, TABLES & COUNTERS

1. **11B-221.1 ASSEMBLY AREAS GENERAL.** ASSEMBLY AREAS SHALL PROVIDE WHEELCHAIR SPACES, COMPANION SEATS, DESIGNATED AISLE SEATS AND SEMI-AMBULANT SEATS COMPLYING WITH SECTIONS 11B-221 AND 11B-802. IN ADDITION, LAWN SEATING SHALL COMPLY WITH SECTION 11B-221.5

2. **11B-221.2 WHEELCHAIR SPACES.** WHEELCHAIR SPACES COMPLYING WITH SECTION 11B-221.2 SHALL BE PROVIDED IN ASSEMBLY AREAS WITH FIXED SEATING.
   2.1. **11B-221.2.1.1 GENERAL SEATING.** WHEELCHAIR SPACES COMPLYING WITH SECTION 11B-802.1 SHALL BE PROVIDED IN ACCORDANCE WITH TABLE 11B-221.2.1.1

3. **11B-902.3 HEIGHT.** THE TOPS OF DINING SURFACES AND WORK SURFACES SHALL BE 28 INCHES MINIMUM AND 34 INCHES MAXIMUM ABOVE THE FINISH FLOOR OR GROUND.

TABLE 11B-221.2.1.1
NUMBER OF WHEELCHAIR SPACES IN ASSEMBLY AREAS

NUMBER OF SEATS	MINIMUM NUMBER OF REQUIRED WHEELCHAIR SPACES
4 TO 25	1
26 TO 50	2
51 TO 150	4
151 TO 300	5
301 TO 500	6
501 TO 5000	6, PLUS 1 FOR EACH 100, OR FRACTION THEREOF, BETWEEN 501 THROUGH 5000
5001 AND OVER	46, PLUS 1 FOR EACH 200, OR FRACTION THEREOF, OVER 5000

4. **11B-904.4 SALES AND SERVICE COUNTERS.** SALES COUNTERS AND SERVICE COUNTERS SHALL COMPLY WITH SECTION 11B-904.4.1 OR 11B-904.4.2. THE ACCESSIBLE PORTION OF THE COUNTER TOP SHALL EXTEND THE SAME DEPTH AS THE SALES OR SERVICE COUNTER TOP.
   4.1. **11B-904.4.1 PARALLEL APPROACH.** A PORTION OF THE COUNTER SURFACE THAT IS 36 INCHES LONG MINIMUM AND 34 INCHES HIGH MAXIMUM ABOVE THE FINISH FLOOR SHALL BE PROVIDED. A CLEAR FLOOR OR GROUND SPACE COMPLYING WITH SETION 11B-305 SHALL BE POSITIONED FOR A PARALLEL APPROACH ADJACENT TO THE 36 INCHE MINIMUM LENGTH OF COUNTER.
   4.2. **11B-904.4.2 FORWARD APPROACH.** A PORTION OF THE COUNTER SURFACE THAT IS 36 INCHES LONG MINIMUM AND 34 INCHES HIGH MAXIMUM SHALL BE PROVIDED. KNEE AND TOE SPACE COMPLYING WITH SECTION 11B-306 SHALL BE PROVIDED UNDER THE COUNTER. A CLEAR FLOOR OR GROUND SPACE COMPLYING WITH SECTION 11B-305 SHALL BE POSITIONED FOR FORWARD APPROACH TO HE COUNTER.

ELECTRICAL

1. **11B-308.1 REACH RANGES GENERAL.** REACH RANGES SHALL COMPLY WITH SECTION 11B-308.

2. **11B-308.1.1 ELECTRICAL SWITCHES.** CONTROLS AND SWITCHES INTENDED TO BE USED BY THE OCCUPANT OF A ROOM OR AREA TO CONTROL LIGHTING AND RECEPTACLE OUTLETS, APPLIANCES OR COOLING, HEATING AND VENTILATING EQUIPMENT, SHALL COMPLY WITH SECTION 11B-308 EXCEPT THE LOW REACH SHALL BE MEASURED TO THE BOTTOM OF THE OUTLET BOX AND THE HIGH SHALL BE MEASURED TO HE TOP OF THE OUT BOX.

3. **11B-308.1.2 ELECTRICAL RECEPTACLE OUTLETS.** ELECTRICAL RECEPTACLE OUTLETS ON BRANCH CIRCUITS OF 30 AMPERES OR LESS AND COMMUNICATION SYSTEM RECEPTACLES SHALL COMPY WITH ECTION 11B-308 EXCEPT THE LOW REACH SHALL BE MEASURED TO THE BOTTOM OF THE OUTLET BOX AND THE HIGH REACH SHALL BE MEASURED TO HE TOP OF THE OUTLET BOX.

4. **[F] 907.4 INITIATING DEVICES.** WHERE MANUAL OR AUTOMATIC ALARM INITIATION IS REQUIRED AS PART OF FIRE ALARM SYSTEM, THE INITIATING DEVICES SHALL BE INSTALLED IN ACCORDANCE WITH SECTION 907.4.1 THROUGH 907.4.3.1.

5. **[F] 907.4.2.2 HEIGHT.** THE HEIGHT OF THE MANUAL FIRE ALARM BOXES SHALL BE A MINIMUM OF 42 INCHES AND A MAXIMUM OF 48 INCHES MEASURED VERTICALLY, FROM THE FLOOR LEVEL TO THE ACTIVATING HAND OR LEVER OF THE BOX. MANUAL FIRE ALARM BOXES SHALL ALSO COMPLY WITH 11B-309.4.

ACCESSIBILITY NOTES (CONT.)

EXCEPTION: [DSA-AC] IN EXISTING BUILDINGS THERE IS NO REQUIREMENT TO RETROACTIVELY RELOCATE EXISTING MANUAL FIRE ALRM BOXES TO MINIMUM OF 42 INCHES AND A MAXIMUM OF 48 INCHES FROM THE FLOOR LEVEL TO THE HIGHEST POINT OF THE ACTIVATED HANDLE OR LEVER OF THE BOX. MANUAL FIRE ALARM BOXES SHALL ALSO COMPLY WITH 11B-309.4

RESTROOM

1. **11B-213.3 PLUMBING FIXTURES AND ACCESSORIES.** PLUMBING FIXTURES AND ACCESSORIES PROVIDED IN A TOILET ROOM OR BATHING ROOM REQUIRED TO COMPLY WITH SECTION 11B-213.3.

2. **11B-605.1 URINALS GENERAL.** URINALS SHALL COMPLY WITH SECTION 11B 605.

3. **11B-605.2 HEIGHT AND DEPTH.** URINALS SHALL BE THE STALL-TYPE OR THE WALL-HUNG TYPE WITH THE RIM 17 INCHES MAXIMUM ABOVE THE FINISH FLOOR OR GROUND. URINALS SHALL E 13 1/2 INCHES DEEP MINIMUM MEASURED FROM THE OUTER FACE OF THE URINAL RIM TO THE BACK OF THE FIXTURE.

4. **11B-606.5 EXPOSED PIPES AND SURFACES.** WATER SUPPLY AND DRAIN PIPES UNDER LAVATORIES AND SINKS SHALL BE INSULATED OR OTHERWISE CONFIGURED TO PROTECT AGAINST CONTACT. THERE SHALL BE NO SHARP OR ABRASIVE SURFACES UNDER LAVATORIES AND SINKS.

5. **11B-606.4 FAUCETS.** CONTROLS FOR FAUCETS SHALL COMPLY WITH SECTION 11B-309. HAND-OPERATED METERING FAUCETS SHALL REMAIN OPEN FOR 10 SECONDS MINIMUM.

6. **11B-609.1 GRAB BARS GENERAL.** GRAB BARS IN TOILET FACILITIES AND BATHRING FACILITES SHALL COMPLY WITH SECTION 11B-609.

7. **11B-609.2 CROSS SECTION.** GRAB BARS SHALL HAVE A CROSS SECTION COMPLYING WITH SECTION 11B-609.2.1 OR 11B609.2.2
   7.1. **11B-609.2.1 CIRCULAR CROSS SECTION.** GRAB BARS WITH CIRCULAR CROSS SECTIONS SHALL HAVE AN OUTSIDE DIAMETER OF 1 1/4 INCHES MINIMUM AND 2 INCHES MAXIMUM.
   7.2. **11B-609.2.2 NON-CIRCULAR CROSS SECTION.** GRAB BARS WITH NON-CIRCULAR CROSS SECTIONS SHALL HAVE A CROSS-SECTION DIMENSION OF 2 INCHES MAXIMUM AND A PERIMETER DIMENSION OF 4 INCHES AND 4.8 INCHES MAXIMUM

8. **11B-609.3 SPACING.** THE SPACE BETWEEN THE WALL AND THE GRAB BAR SHALL BE 1 1/2 INCHES. THE SPACE BETWEEN THE GRAB BAR AND PROJECTING OBJECTS BELOW AND AT THE ENDS SHALL BE 1 1/2 INCHES MINIMUM. THE SPACE BETWEEN THE GRAB BAR AND PROJECTING OBJECTS ABOVE SHALL BE 12 INCHES MINIMUM.

9. **11B-609.4 POSITION OF GRAB BARS.** GRAB BARS SHALL BE INSTALLED IN A HORIZONTAL POSITION, 33 INCHES MINIMUM AND 36 INCHES MAXIMUM ABOVE THE FINISH FLOOR MEASURED TO THE TOP OF THE GRIPPING SURFACE, EXCEPT THAT AT WATER CLOSETS FOR CHILDREN'S USE COMPLYING WITH SECTION 11B-604.9, GRAB BARS SHALL BE INSTALLED IN A HORIZONTAL POSITION 18 INCHES MINIMUM AND 27 INCHES MAXIMUM ABOVE THE FINISH FLOOR MEASURED TO THE TOP OF THE GRIPPING SURFACE. THE HEIGHT OF THE LOWER GRAB BAR ON THE BACK WALL OF A BATHTUB SHALL COMPLY WITH SECTION 11B-607.4.1.1 OR 11B-607.4.2.1.

10. **11B-609.5 SURFACE HAZARDS.** GRAB BARS AND ANY WALL OR OTHER SURFACES ADJACENT TO GRAB BARS SHALL BE FREE OF SHARP OR ABRASIVE ELEMENTS AND SHALL HAVE ROUNDED EDGES.

11. **11B-609.6 FITTINGS.** GRAB BARS SHALL NOT ROTATE WITHIN THEIR FITTINGS.

12. **11B-609.8 STRUCTURAL STRENGTH.** ALLOWABLE STRESS SHALL NOT BE EXCEEDED FOR MATERIALS USED WHEN A VERTICAL OR HORIZONTAL FORCE OF 250 POUNDS IS APPLIED AT ANY POINT ON THE GRAB BAR, FASTENER, MOUNTING DEVICE, OR SUPPORTING STRUCTURE.

13. **11B-603.5 ACCESSORIES.** WHERE TOWEL OR SANITARY NAPKIN DISPENSERS, WASTE RECEPTACLES, OR OTHER ACCESSORIES ARE PROVIDED IN TOILET FACILITIES, AT LEAST ONE OF EACH TYPE SHALL BE LOCATED ON AN ACCESSIBLE ROUTE. ALL OPERABLE PARTS, INCLUDING COIN SLOTS, SHALL BE 40 INCHES MAXIMUM ABOVE THE FINISH FLOOR.

14. **11B-604.1 WATER CLOSETS AND TOILET COMPARTMENTS GENERAL.** WATER CLOSETS AND TOILET COMPARTMENTS SHALL COMPLY WITH SECTIONS 11B-604.2 THROUGH 11B-604.8

15. **11B-604.2 LOCATION.** THE WATER CLOSET SHALL BE POSITIONED WITH WALL OR PARTITION TO THE REAR AND TO ONE SIDE. THE CENTERLINE OF THE WATER CLOSET SHALL BE 17 INCHES MINIMUM TO 18 INCHES MAXIMUM FROM THE WIDE WALL OR PARTITION, EXCEPT THAT THE WATER CLOSET SHALL BE 17 INCHES MINIMUM AND 19 INCHES MAXIMUM FROM THE SIDE WALL OR PARTITION IN THE AMBULATORY ACCESSIBLE TOILET COMPARTMENT SPECIFIED IN SECTION 11B-604.8.2. WATER CLOSETS SHALL BE ARRANGED FOR A LEFT-HAND OR RIGHT-HAND APPROACH.

16. **11B-604.4 SEATS.** THE SEAT HEIGHT OF A WATER CLOSET ABOVE THE FINISH FLOOR SHALL BE 17 INCHES MINIMUM AND 19 INCHES MAXIMUM MEASURED TO THE TOP OF THE SEAT. SEATS SHALL NOT BE SPRUNG TO RETURN TO A LIFTED POSITION. SEATS SHALL BE 2 INCHES HIGH MAXIMUM.

17. **11B-604.6 FLUSH CONTROLS.** FLUSH CONTROLS SHALL BE HAND OPERATED OR AUTOMATIC. HAND OPERATED FLUSH CONTROLS SHALL COMPLY WITH SECTION 11B-309 EXCEPT THEY SHALL BE LOCATED 44 INCHES MAXIMUM ABOVE THE FLOOR. FLUSH CONTROLS SHALL BE LOCAED ON HE OPEN SIDE OF THE WATER CLOSET EXCEPT IN AMBULATORY ACCESSIBLE COMPARTMENTS COMPLYING WITH SECTION 11B-604.8.2.

18. **11B-606.1 LAVATORIES AND SINKS GENERAL.** LAVATORIES AND SINKS SHALL COMPLY WITH SECTION 11B-606.

19. **11B-606.2 CLEAR FLOOR SPACE.** A CLEAR FLOOR SPACE COMPLYING WITH SECTION 11B-305, POSITIONED FOR A FORWARD APPROACH, AND KNEE AND TOE CLEARANCE COMPLYING WITH SECTION 11B-306 SHALL BE PROVIDED.

20. **11B-603.3 MIRRORS.** MIRRORS LOCATED ABOVE LAVATORIES OR COUNTERTOPS SHALL BE INSTALLED WITH THE BOTTOM EDGE OF THE REFLECTING SURFACE 40 INCHES MAXIMUM ABOVE THE FINISH FLOOR OR GROUND. MIRRORS NOT LOCATED ABOVE LAVATORIES OR COUNTERTOPS SHALL BE INTALLED WITH THE BOTTOM EDGE OF THE REFLECTING SURFACE 35 INCHES MAXIMUM ABOVE THE FINISH FLOOR OR GROUND.

GREG KORN AIA ARCHITECTS

INTERIOR ALTERATION

2525 MOORPARK RD
THOUSAND OAKS, CA 91362

Client
Andrew Mooney, Park Planner
CONEJO RECREATION & PARK DISTRICT
403 W. Hillcrest Drive
Thousand Oaks CA 91360
(805) 495-6471
amooney@crpd.org

Architect
G. Ian Korn, AIA
GKA Architects
351 Rolling Oaks Dr Ste 202
Thousand Oaks, CA 91361
gkorn@gka-arc.com
(805) 370-1300

MEP Engineer
Arash Nazari, PE
A&N Design Group Inc
21550 Oxnard Street #300
Woodland Hills, CA 91367
818-288-4361
arash@an-dg.com

Plan Examiner
TBD
City of Thousand Oaks
Building Division
2100 E Thousand Oaks Blvd
Thousand Oaks, CA 91361
(805) 449-2100

No.	Description	Date
1	Schematic Design to Client	08.07.19
2	Schematic Design to Client- Storage	08.27.19
3	Building Dept Submittal	09.23.19
4	Building Dept Corrections	10.25.19
5	Public Works Corrections	11.07.19
6	CDs to Client-Storage	01.13.20
7	CDs to Client-Storage Rev	01.21.20

Project number	2019003
Date	01.21.20
Drawn by	GK
Checked by	GK

Drawing Name
ACCESSIBILITY NOTES

Drawing No.
G-102.00

NOTE: DO NOT SCALE DRAWING
Scale AS NOTED

ACCESSIBILITY NOTES (CONT.)

21. **11B-604.7 DISPENSERS.** TOILET PAPER DISPENSERS SHALL COMPLY WITH SECTION 11B-309.4 AND SHALL BE 7 INCHES MINIMUM AND 9 INCHES MAXIMUM IN FRONT OF THE WATER CLOSET MEASURED TO HE ENTERLINE OF THE DISPENSER. THE OUTLET OF THE DISPENSER SHALL BE BELOW THE GRAB BAR, 19 INCHES MINIMUM ABOVE THE FINISH FLOOR AND SHALL NOT BE LOCATED BEHIND GRAB BARS. DISPENSERS SHALL NOT BE OF A TYPE THAT CONTROLS DELIVERY OR THAT DOES NOT ALLOW CONTINUOUS PAPER FLOW.

22. **11B-610.4 STRUCTURAL STRENGTH.** ALLOWABLE STRESS SHALL NOT BE EXCEEDED FOR MATERIALS USED WHEN A VERTICAL OR HORIZONTAL FORCE OF 250 POUNDS IS APPLIED AT ANY POINT ON THE SEAT, FASTENER, MOUNTING DEVICE, OR SUPPORTING STRUCTURE..

SIGNS & IDENTIFICATION

CALIFORNIA'S STANDARDS FOR SIGNAGE ARE MORE STRINGENT AND ARE SIGNIFICANTLY LARGER AND WIDER THAN FEDERAL AW, AMERICANS WITH DISABILITIES ACT (ADA) SECTION 4.30.

THE INTERNATIONAL SYMBOL OF ACCESSIBILITY SHALL BE THE STANDARD USED TO IDENTIFY FACILITIES THAT ARE ACCESSIBLE TO AND USABLE BY PHYSICALLY DISABLED PERSONS AS SET FORTH IN TITLE 24 AND AS SPECIFICALLY REQUIRED IN THIS SECTION.

1. **11B-703.7.2.1 INTERNATIONAL SYMBOL OF ACCESSIBILITY.** THE INTERNATIONAL SYMBOL OF ACCESSIBILITY SHALL COMPLY WITH FIGURE 11B-703.7.2.1. THE SYMBOL SHALL CONSITS OF A WHITE FIGURE ON A BLUE BACKGROUND. THE COLOR BLUE SHALL APPROXIMATE FS 15090 IN FEDERAL STANDARD 595C.

   EXCEPTIONS:
   1. THE APPROPRIATE ENFORCEMENT AGENCY MAY APPROVE OTHER COLORS PROVIDED THE SYMBOL CONTRAST IS LIGHT ON DARK OR DARK ON LIGHT.
   2. ON THE ACCESSIBILITY FUNCTION BUTTON ON HALL CALL CONSOLES IN A DESTINATION-ORIENTED ELEVATOR SYSTEM THE INTERNATIONAL SYMBOL OF ACCESSIBILITY SHALL BE A WHITE SYMBOL ON A BLACK BACKGROUND.

2. **11B-216.6 ENTRANCES.** IN EXISTING BUILDINGS AND FACILITES WHERE NOT ALL ENTRANCES COMPLY WITH SECTION 11B-404, ENTRANCES COMPLYING WITH SECTION 11B-404 SHALL BE IDENTIFIED BY THE INTERNATIONAL SYMBOL OF CCESSIBILITY COMPLYING WITH SECTION 11B-703.7.2.1. DIRECTIONAL SIGNS COMPLYING WITH SECTION 11B-703.5 THAT INDICATE THE LOCATION OF THE NEAREST ENTRANCE COMPLYING WITH SECTION 11B-404 SHALL BE PROVIDED AT ENTRANCES THAT DO NOT COMPLY WITH SECTION 11B-404. DIRECTIONAL SIGNS COMPLYING WITH SECTION 11B-703.5, INCLUDING THE INTERNATIONAL SYMBOL OF ACCESSIBILITY COMPLYING WITH SECTION 11B-703.7.2.1, INDICATING THE ACCESSIBLE ROUTE TO THE NEAREST ACCESSIBLE ENTRANCE SHALL BE PROVIDED T JUNCTIONS WHEN HE ACCESSIBLE ROUTE DIVERGES FROM HE REGULAR CIRCULATION PATH.

   EXCEPTIONS:
   1. AN INTERNATIONAL SYMBOL OF ACCESSIBILITY IS NOT REQUIRED AT ENTRANCES TO INDIVIDUAL ROOMS, SUITES, OFFICES, SALES OR RENTAL ESTABLISHMENTS, OR OTHER SUCH SPACES WHEN ALL ENTRANCES TO THE BUILINDG OR FACILITY ARE ACCESSIBLE AND PERSON ENTERING THE BUILDING OR FACILITY HAVE PASSED THROUGH ONE OR MORE ENTRANCES WITH SIGNAGE COMPLYING WITH THIS SECTION.
   2. AN INTERNATIONAL SYMBOL OF ACCESSIBLITY IS NOT REQUIRED AT ENTRANCES TO MACHINERY SPACES FREQUENTED ONLY BY SERVICE PERSONNEL FOR MAINTENANCE, REPAIR, OR OCCASIONAL MONITORING OF EQUIPMENT; FOR EXAMPLE, ELEVATOR PITS OR ELEVATOR PENTHOUSES; MECHANICAL, ELECTRICAL OR COMMUNICATIONS EQUIPMENT ROOMS; PIPING OR EQUIPMENT CATWALKS; ELECTIC SUBSTATIONS AND TRANSFORMER VAULTS; AND HIGHWAY AND TUNNEL UTILITY FACILITIES.

3. **11B-216.2 DESIGNATIONS.** INTERIOR AND EXTERIOR SIGNS IDENTIFYING PERMANENT ROOMS AND SPACES SHALL COMPLY WITH SECTIONS 11B-703.1, 11B-703.2, 11B-703.3, AND 11B-703.5. WHERE PICTOGRAMS ARE PROVIDED AS DESIGNATIONS OF PERMANENT ROOMS AND SPACES, THE PICTOGRAMS SHALL COMPLY WITH SECTION 11B-703.6 AND SHALL AVE TEXT DESCRIPTORS COMPLYING WITH SECTIONS 11B-703.2 AND 11B-703.5.

   EXCEPTION: EXTERIOR SIGNS THAT ARE NOT LOCATED AT EHE DOOR TO THE SPACE THEY SERVE SHALL NOT BE REQUIRED TO COMPLY WITH SECTION 11B-703.2.

4. **11B-216.3 DIRECTIONAL AND INFORMATIONAL SIGNS.** SIGNS THAT PROVIDE DIRECTION TO OR NFORMATION ABOUT INTERIOR AND EXTERIOR SPACES AND FACILITIES OF THE SITE SHALL COMPLY WITH SECTION 11B-703.5.

5. **11B-703.2 RAISED CHARACTERS.** RAISED CHARACTERS SHALL COMPLY WITH SECTION 11B-703.2 AND SHALL BE DUPLICATED IN BRAILLE COMPLYING WITH SECTION 11B-703.3. RAISED CHARACTERS SHALL BE INSTALLED IN ACCORDANCE WITH SECTION 11B-703.4.
   - 5.1. **11B-703.2.1 DEPTH.** RAISED CHARACTERS SHALL E 1/32 INCH MINIMUM ABOVE THEIR BACKGROUND.
   - 5.2. **11B-703.2.2 CASE.** CHARACTERS SHALL BE UPPERCASE.
   - 5.3. **11B-703.2.3 STYLE.** CHARACTERS SHALL BE SANS SERIF. CHARACTERS SHALL OT BE ITALIC, OBLIQUE, SCRIPT, HIGHLY DECORATIVE, OR OF OTHER UNUSUAL FORMS.
   - 5.4. **11B-703.2.4 CHARACTER PROPORTIONS.** CHARACTERS SHALL BE SELECTED FROM FONTS WHERE HE WIDTH OF THE UPPERCASE LETTER "O" IS 60 PERCENT MINIMUM AND 110 PERCENT MAXIMUM OF THE HEIGHT OF THE UPPERCASE LETTER "I".
   - 5.5. **11B-703.2.5 CHARACTER HEIGHT.** CHARACTER HEIGHT MEASURED VERTICALLY FROM THE BASELINE OF THE CHARACTER SHALL BE 5/8 INCH MINIMUM AND 2 INCHES MAXIMUM BASED ON THE HEIGHT OF THE UPPERCASE LETTER "I".
   - 5.6. **11B-703.2.6 STROKE THICKNESS.** STROKE THICKNESS OF THE UPPERCASE LETTER "I" SHALL BE 15 PERCENT MAXIMUM OF THE HEIGHT OF THE CHARACTER.

ACCESSIBILITY NOTES (CONT.)

   - 5.7 **11B-703.2.7 CHARACTER SPACING.** CHARACTER SPACING SHALL BE MEASURED BETWEEN THE TWO CLOSEST POINTS OF ADJACENT RAISED CHARACTED WITHIN A MESAGE, EXCLUDING WORD SPACES. WHERE CHRACTERS HAVE RECTANGULAR CROSS SECTIONS, SPACING BETWEEN INDIVIDUAL RAISED CHRACTERS SHALL BE 1/8 INCH MINIMUM AND 4 TIMES THE RAISED CHRACTER STROKE WIDTH MAXIMUM. WHERE CHARACTERS HAVE OTHER CROSS SECTIONS, SPACING BETWEEN INDIVIDUAL RAISED CHARACTERS SHALL BE 1/16 INCH MINIMUM AND 4 TIMES THE RAISED CHRACTER STROKE WIDTH MAXIMUM AT THE BASE OF THE CROSS SECTIONS, AND 1/8 INCH MINIMUM AND 4 TIMES THE RAISED CHARACTER STROKE WIDTH MAXIMUM AT HE TOP OF THE CROSS SECTIONS. CHARACTERS SHALL BE SEPARATED FROM RAISED BORDERS AND DECORATIVE ELEMENTS 3/8 INCH MINIMUM.
   - 5.8 **11B-703.2.8 LINE SPACING.** SPACING BETWEEN THE BASELINES OF SEPARATE LINESOF RAISED CHARACTERS WITHIN A MESSAGE SHALL BE 135 PERCENT MINIMUM AND 170 PERCENT MAXIMUM OF THE RAISED CHARACTER HEIGHT.
   - 5.9 **11B-703.2.9 FORMAT.** TEXT SHALL BE IN A HORIZONTAL FORMAT.

6. **11B-703.3 BRAILLE.** BRAILLE SHALL BE CONTRACTED (GRADE 2) AND SHALL COMPLY WITH SECTIONS 11B-703.3 AND 11B-703.4
   - 6.1. **11B-703.3.1 DIMENSIONS AND CAPITALIZATION.** BRAILLE DOTS SHALL HAVE A DOMED OR ROUNDED SHAPE AND SHALL COMPLY WITH TABEL 11B-703.3.1. THE INDICATION OF AN UPPERCASE LETTER OR LETTERS SHALL ONLY BE USED BEFORE THE FIRST WORD OF SENTENCES, PROPER NOUNS AND NAMES, INDIVIDUAL LETTERS OF THE ALPHABET, INITIALS, AND ACRONYMS.
   - 6.2. **11B-703.3.2 POSITION.** BRAILLE SHALL BE POSITIONED BELOW THE CORRESPONDING TEXT N A HORIZONTAL FORMAT, FLUSH LEFT OR CENTERED. IF TEXT IS MULTI-LINED, BRAILLE SHALL BE PLACED BELOW THE ENTIRE TEXT. BRAILLE SHALL BE SEPARATED 3/8 INCH MINIMUM AND 1/2 INCH MAXIMUM FROM ANY OTHER TACTILE CHARACTERS AND 3/8 MINIMUM FROM RAISED BORDERS AND DECORATIVE ELEMENTS.

7. **11B-703.5 VISUAL CHARACTERS.** VISUAL CHARACTERS SHALL COMPLY WITH SECTION 11B-703.5.
   - 7.1. **11B-703.5.1 FINISH AND CONTRACT.** CHARACTERS AND THEIR BACKGROUND SHALL HAVE A NON-GLARE FINISH. CHARACTERS SHALL CONTRAST WITH THEIR BACKGROUND WITH EITHER LIGHT CHARACTERS ON A DARK BACKGROUND OR DARK CHARACTERS ON A IGHT BACKGROUND.
   - 7.2. **11B-703.5.2 CASE.** CHARACTERS SHALL BE UPPERCASE OR LOWERCASE OR A COMBINATION OF BOTH.
   - 7.3. **11B-703.5.3 STYLE.** CHARACTERS SHALL BE CONVENTIONAL IN FORM. CHARACTERS SHALL NOT BE ITALIC, OBLIQUE, SCRIPT, HIGHLY DECORATIVE, OR OF OTHER UNUSUAL FORMS.
   - 7.4. **11B-703.5.4 CHARACTER PROPORTIONS.** CHARACTERS SHALL BE SELECTED FROM FONTS WHERE THE WIDTH OF THE UPPERCASE LETTER "O" IS 60 PERCENT MINIMUM AND 110 PERCENT MAXIMUM OF THE HEIGHT OF THE UPPERCASE LETTER "I"
   - 7.5. **11B-703.5.5 CHARACTER HEIGHT.** MINIMUM CHARACTER HEIGHT SHALL COMPLY WITH TABLE 11B-703.5.5. VIEWING DISTANCE SHALL BE MEASURED AS THE HORIZONTAL DISTANCE BETWEN THE CHARACTER AND AN OBSTRUCTION PREVENTING FURTHER APPROACH TOWARDS THE SIGN. CHARACTER HEIGHT SHALL BE BASED ON THE UPPERCASE LETTER "I"
   - 7.6. **11B-703.5.6 HEIGHT FROM FINISH FLOOR OR GROUND.** VISUAL CHARACTERS SHALL BE 40 INCHES MINIMUM ABOVE THE FINISH FLOOR OR GROUND.
   - 7.7. **11B-703.5.7 STROKE THICKNESS.** STROKE THICKNESS OF THE UPPERCASE LETTER "I" SHALL BE 10 PERCENT MINIMUM AND 20 PERCENT MAXIMUM OF THE HEIGHT OF THE CHARACTER.
   - 7.8. **11B-703.5.8 CHARACTER SPACING.** CHARACTER SPACING SHALL BE MEASURED BETWEEN HE TWO CLOSEST POINTS OF ADJACENT CHARACTERS, EXCLUDING WORD SPACES. SPACING BETWEEN INDIVIDUAL CHARACTERS SHALL E 10 PERCENT MINIMUM AND 35 PERCENT MACIMUM OF CHARACTER HEIGHT.
   - 7.9. **11B-703.5.9 LINE SPACING.** SPACING BETWEEN THE BASELINES OF SEPARATE LINES OF CHARACTERS WITHIN A MESSAGE SHALL BE 135 PERCENT MINIMUM AND 170 PERCENT MAXIMUM OF THE CHARACTER HEIGHT.

8. **11B-703.6 PICTOGRAMS.** PICTOGRAMS SHALL COMPLY WITH SECTION 11B-703.6.
   - 8.1. **11B-703.6.1 PICTOGRAM FIELD.** PICTOGRAMS SHALL HAVE A FIELD HEIGHT OF 6 INCHES MINIMUM. CHARACTERS AND BRAILE SHALL NOT BE LOCATED IN THE PICTOGRAM FIELD.
   - 8.2. **11B-703.6.2 FINISH AND CONTRAST.** PICTOGRAMS AND THEIR FIELD SHALL HAE A NON-GLARE FINISH. PICTOGRAMS SHALL CONTRAST WITH THEIR FIELD WITH EITHER A LIGHT PICTOGRAM ON A DARK FIELD OR ARK PICTOGRAM ON A LIGHT FIELD.
   - 8.3. **11B-703.6.3 TEXT DESCRIPTORS.** PICTOGRAMS SHALL HAVE TEXT DESCRIPTORS LOCATED DIRECTLY BELOW THE PICTOGRAM FIELD. TEXT DESCIPTORS SHALL COMPLY WITH SECTIONS 11B-703.2, 11B-703.3 AND 11B-703.7.

9. **11B-703.7.2.7 PEDESTRIAN TRAFFIC-CONTROL BUTTONS.** POLE-SUPPORTED PEDESTRIAN TRAFFIC-CONTROL BUTTONS SHALL BE IDENTIFIED WITH COLOR CODING CONSISTING OF A TEXTURED HORIZONTAL YELLOW BAND 2 INCHES IN WIDTH ENCIRCLING THE POLE, AND A 1-INCH-WIDE DARK BORDER BAND ABOVE AND BELOW THIS YELLOW BAND. COLOR CODING SHALL BE PLACED IMMEDIATELY ABOVE THE CONTROL BUTTON. CONTROL BUTTONS SHALL BE LOCATED NO HIGHER THAN 48 INCHES ABOVE THE GROUND SURFACE ADJACENT TO THE POLE.

10. **11B-502.8 ADDITIONAL SIGNAGE.** AN ADDITIONAL SIGN SHALL BE POSTED EITHER; 1) IN A CONSPICUOUS PLACE AT EACH ENTRANCE TO AN OFF-STREET PARKING FACILITY OR 2) IMMEDIATELY ADJACENT TO ON-SITE ACCESSIBLE PARKING AND VISIBLE FROM EACH PARKING SPACE.
    - 10.1. **11B-502.8.1 SIZE.** THE ADDITIONAL SIGN SHALL NOT BE LESS THAN 17 INCHES WIDE BY 22 INCHES HIGH.
    - 10.2. **11B-502.8.2 LETTERING.** THE ADDITIONAL SIGN SHALL CLEARLY STATE IN LETTERS WITH A MINIMUM HEIGHT OF 1 INCH THE FOLLOWING:

    "UNAUTHORIZED VEHICLES PARKED IN DESIGNATED ACCESSIBLE SPACES NOT DISPLAYING DISTINGUISHING PLACARDS OR SPECIAL LICENSE PLATES ISSUED FOR PERSONS WITH DISABILITIES WILL BE TOWED AWAY AT OWNER'S EXPENSE. TOWED VEHICLES MAY BE RECLAIMED AT _____ OR BY TELEPHONING _____. BLANK SPACES SHALL BE FILLED IN WITH APPROPRIATE INFORMATION AS A PERMANENT PART OF THE SIGN."

ACCESSIBILITY NOTES (CONT.)

FOOD SERVICE AND TABLEWARE AREAS

1. **11B-904.5 FOOD SERVICE LINES.** COUNTERS IN FOOD SERVICE LINES SHALL COMPLY WITH SECTION 11B-904.5.
   - 1.1. **11B-904.5.1 SELF-SERVICE SHELVES AND DISPENSING DEVICES.** SELF-SERVICE SHELVES AND DISPENSING DEVICES FOR TABLEWARE, DISHWARE, CONDIMENTS, FOOD AND BEVERAGES SHALL COMPLY WITH SECTION 11B-308.
   - 1.2. **11B-904.5.2 TRAY SLIDES.** THE TOPS OF TRAY SLIDES SHALL BE 28 INCHES MINIMUM AND 34 INCHES MAXIMUM ABOVE THE FINISH FLOOR GROUND.

HAZARDS AND PROTRUDING OBJECTS

1. **11B-705.1 DETECTABLE WARNINGS.**
   - 1.1. **11B-705.1.1 GENERAL.** DETECTABLE WARNINGS SHALL CONSIST OF A SURFACE OF TRUNCATED DOMES AND SHALL COMPLY WITH SECTION 11B-705.
   - 1.2. **11B-705.1.2 LOCATIONS.** DETECTABLE WARNINGS AT THE FOLLOWING LOCATIONS SHALL COMPLY WITH SECTION 11B-705.1.
     - 1.2.1. **11B-705.1.2.1 PLATFORM EDGES.** DETECTABLE WARNING SURFACES AT PLATFORM BOARDING EDGES SHALL BE 24 INCHES WIDE AND SHALL EXTEND THE FULL LENGTH OF THE PUBLIC USE AREAS OF THE PLATFORM.
     - 1.2.2. **11B-705.1.2.2 CURB RAMPS.** DETECTABLE WARNINGS AT CURB RAMPS SHALL EXTEND 36 INCHES IN THE DIRECTION OF TRAVEL. DETECTABLE WARNINGS SHALL EXTEND THE FULL WIDTH OF THE RAMP RUN LESS 2 INCHES MAXIMUM ON EACH SIDE, EXCLUDING ANY FLARED SIDES. DETECTABLE WARNINGS SHALL BE LOCATED SO THE EDGE NEAREST THE CURB IS 6 INCHES MINIMUM AND 8 INCHES MAXIMUM FROM THE LINE AT THE FACE OF THE CURB MARKING THE TRANSITION BETWEEN THE CURB AND THE GUTTER, STREET OR HIGHWAY.

2. **11B-303.5 WARNING CURBS.** ABRUPT CHANGES IN LEVEL EXCEEDING 4 INCHES IN A VERTICAL DIMENSION BETWEEN WALKS, SIDEWALKS OR OTHER PEDESTRIAN WAYS AND ADJACENT SURFACES OR FEATURES SHALL BE IDENTIFIED BY WARNING CURBS AT LEAST 6 INCHES IN HEIGHT ABOVE THE WALK OR SIDEWALK SURFACE.

   EXCEPTIONS:
   1. A WARNING CURB IS NOT REQUIRED BETWEEN A WALK OR SIDEWALK AND AN ADJACENT STREET OR DRIVEWAY.
   2. A WARNING CURB IS NOT REQUIRED WHEN A GUARD OR HANDRAIL IS PROVIDED WITH A GUIDE RAIL CENTERED 2 INCHES MINIMUM AND 4 INCHES MAXIMUM ABOVE THE SURFACE OF THE WALK OR SIDEWALK.

3. **11B-307.2 PROTRUSTION LIMITS.** OBJECTS WITH LEADING EDGES MORE THAN 27 INCHES AND NOT MORE THAN 80 INCHES ABOVE THE FINISH FLOOR OR GROUND SHALL PROTRUDE 4 INCHES MAXIMUM HORIZONTALLY INTO THE CIRCULATION PATH.

   EXCEPTION: HANDRAILS SHALL BE PERMITTED TO PROTRUDE 4 1/2 INCHES MAXIMUM.

4. **11B-307.3 POST-MOUNTED OBJECTS.** FREE-STANDING OBJECTS MOUNTED ON POSTS OR PYLONS SHALL OVERHANG CIRCULATION PATHS 12 INCHES MAXIMUM WHEN LOCATED 27 INCHES MINIMUM AND 80 INCHES MAXIMUM ABOVE THE FINISH FLOOR OR GROUND. WHERE A SIGN OR OTHER OBSTRUCTION IS MOUNTED BETWEEN THE POSTS OR PYLONS AND THE CLEAR DISTANCE BETWEEN THE POSTS OR PYLONS IS GREATER THAN 12 INCHES, THE LOWEST EDGE OF SUCH SIGN OR OBSTRUCTION SHALL BE 27 INCHES MAXIMUM OR 80 INCHES MINIMUM ABOVE THE FINISH FLOOR OR GROUND.

   EXCEPTION: THE SLOPING PORTIONS OF HANDRAILS SERVING STAIRS AND RAMPS SHALL NOT BE REQUIRED TO COMPLY WITH SECTION 11B-307.3

   11B-307.3.1 EDGES AND CORNERS. WHERE SIGNS OR OTHER OBJECTS ARE MOUNTED ON POSTS OR PYLONS, AND THEIR BOTTOM EDGES ARE LESS THAN 80 INCHES ABOVE THE FLOOR OR GROUND SURFACE, THE EDGES OF SUCH SIGN AND OBJECTS SHALL BE ROUNDED OR EASED AND THE CORNERS SHALL HAVE A MINIMUM RADIUS OF 1/8 INCH.

5. **11B-307.4 VERTICAL CLEARANCE.** VERTICAL CLEARANCE SHALL BE 80 INCHES HIGH MINIMUM. GUARDRAILS OR OTHER BARRIERS SHALL BE PROVIDED WHERE THE VERTICAL CLEARANCE IS LESS THAN 80 INCHES HIGH. THE LEADING EDGE OF SUCH GUARDRAIL OR BARRIER SHALL BE LOCATED 27 INCHES MAXIMUM ABOVE THE FINISH FLOOR OR GROUND.

   EXCEPTION: DOOR CLOSERS AND DOOR STOPS SHALL BE PERMITTED TO BE 78 INCHES MINIMUM ABOVE THE FLOOR OR GROUND.

   11B-307.4.1 GUY BRACES. WHERE A GUY SUPPORT IS USED WITHIN EITHER THE WIDTH OF A CIRCULATION PATH OR 24 INCHES MAXIMUM OUTSIDE OF A CIRCULATION PATH, A VERTICAL GUY BRACE, SIDEWALK GUY OR SIMILAR DEVICE SHALL BE USED TO PREVENT A HAZARD OR AN OVERHEAD OBSTRUCTION.

6. **11B-307.5 REQUIRED CLEAR WIDTH.** PROTRUDING OBJECTS SHALL NOT REDUCE THE CLEAR WIDTH REQUIRED FOR ACCESSIBLE ROUTES.

7. **11B-705.2 DETECTABLE DIRECTIONAL TEXTURE.** DETECTABLE DIRECTIONAL TEXTURE AT TRANSIT BOARDING PLATFORMS SHALL COMPLY WITH FIGURE 11B-705.2 AND SHALL BE 0.1 INCH IN HEIGHT THAT TAPERS OFF TO 0.04, WITH BARS RAISED 0.2 INCH FROM THE SURFACE. THE RAISED BARS SHALL BE 1.3 INCHES WIDE AND 3 INCHES FROM CENTER-TO-CENTER OF EACH BAR. THIS SURFACE SHALL DIFFER FROM ADJOINING WALKING SURFACES IN RESILIENCY OR SOUND-ON-CANE CONTACT. THE COLOR SHALL BE YELLOW AND AND APPROXIMATE FS 33538 OF FEDERAL STANDARD 595C. THIS SRUFACE WILL BE PLACED DIRECTLY BEHIND THE YELLOW DETECTABLE WARNING TEXTURE SPECIFIED IN SECTION 11B-705.1.2.1, ALIGNING WITH ALL DOORS OF THE TRANSIT VEHICLES WHERE PASSENGERS WILL EMBARK. THE WIDTH OF THE DIRECTIONAL TEXTURE SHALL BE EQUAL TO THE WIDTH OF THE TRANSIT VEHICLE'S DOOR OPENING. THE DEPTH OF THE TEXTURE SHALL NOT BE LESS THAN 36 INCHES.

GREG KORN AIA ARCHITECTS

INTERIOR ALTERATION

2525 MOORPARK RD
THOUSAND OAKS, CA 91362

Client
Andrew Mooney, Park Planner
CONEJO RECREATION & PARK DISTRICT
403 W. Hillcrest Drive
Thousand Oaks CA 91360
(805) 495-6471
amooney@crpd.org

Architect
G. Ian Korn, AIA
GKA Architects
351 Rolling Oaks Dr Ste 202
Thousand Oaks, CA 91361
gkorn@gka-arc.com
(805) 370-1300

MEP Engineer
Arash Nazari, PE
A&N Design Group Inc
21550 Oxnard Street #300
Woodland Hills, CA 91367
818-288-4361
arash@an-dg.com

Plan Examiner
TBD
City of Thousand Oaks
Building Division
2100 E Thousand Oaks Blvd
Thousand Oaks, CA 91361
(805) 449-2100

No.	Description	Date
1	Schematic Design to Client	08.07.19
2	Schematic Design to Client- Storage	08.27.19
3	Building Dept Submittal	09.23.19
4	Building Dept Corrections	10.25.19
5	Public Works Corrections	11.07.19
6	CDs to Client-Storage	01.13.20
7	CDs to Client-Storage Rev	01.21.20

Project number	2019003
Date	01.21.20
Drawn by	GK
Checked by	GK

Drawing Name
ACCESSIBILITY NOTES

Drawing No.
G-103.00

NOTE: DO NOT SCALE DRAWINGS
Scale AS NOTED

CALGREEN NOTES

5.303.1 METERS. SEPARATE SUBMETERS OR ETERING EVICES SHALL E NSTALLED FOR THE USES DESCRIBED IN SECTIONS 5303.1.1 AND 5303.1.2.

5.303.1.1 NEW BUILDINGS OR ADDITIONS IN EXCESS OF 50,000 SQUARE FEET. SEPARATE SUBMETERS SHALL BE INSTALLED AS FOLLOWS:

1. FOR EACH INDIVIDUAL LEASED, RENTED, OR OTHER TENANT SPACE WITHIN THE BUILDING PROJECTED TO CONSUME MORE THAN 100 GAL/DAY (380 L/DAY), INCLUDING, BUT NOT LIMITED TO, SPACES USED FOR LAUNDRY OR CLEANERS, RESTAURANT OR FOOD SERVICE, MEDIAL OR DENTAL OFFICE, LABORATORY, OR BEAUTY SALON OR BARBER SHOP.
2. WHERE SEPARATE SUBMETERS FOR INDIVIDUAL BUILDING TENANTS ARE UNFEASIBLE, FOR WATER SUPPLIED TO THE FOLLOWING SUBSYSTEMS:
   - A. MAKEUP WATER FOR COOLING TOWERS WHERE FLOW THROUGH IS GREATER THAN THAN 500 GPM (30 L/S).
   - B. MAKE UP WATER FOR EVAPORTATIVE COOLERS GREATER THAN 6 GPM (0.04 L/S).
   - C. STEAM AND HOT-WATER BOILERS WITH ENERGY INPUT MORE THAN 500,000 BTU/H (147 KW).

5.303.1.2 EXCESS CONSUMPTION. A SEPARATE SUBMETER OR METERING DEVICE SHALL BE PROVIDED OR ANY TENANT WITHIN A NEW BUILDING OR WITHIN AN ADDITION THAT IS PROJECTED TO CONSUME MORE THAN 1,000 GAL/DAY.

5.303.2 WATER REDUCTION. PLUMBING FIXTURES SHALL MEET THE MAXIMUM FLOW RATE VALUES SHOWN IN TABLE 5.303.2.3

EXCEPTION: BUILDINGS THAT DEMONSTRATE 20-PERCENT OVERALL WATER USE REDUCTION. IN THIS CASE, A CALCULATION DEMONSTRATING A 20-PERCENT REDUCTION IN THE BUILDING "WATER USE BASELINE," AS ESTABLISHED IN TABLE 5.303.2.2, SHALL BE PROVIDED.

5.303.2.1 AREAS OF ADDITION OR ALTERATION. FOR THOSE OCCUPANCIES WITHIN THE AUTHORITY OF CALIFORNIA BUILDING STANDARDS COMMISSION AS SPECIFIED IN SECTION 103, THE PROVISIONS OF SECTION 5.303.2 AND SECTION 5.303.3 SHALL APPLY TO NEW FIXTURES IN ADDITIONS OR ARAS OF ALTERATION TO THE BUILDING.

5.303.3 WATER CONSERVING PLUMBING FIXTURES AND FITTINGS. PLUMBING FIXTURES (WATER CLOSETS AND URINALS AND FITTINGS (FAUCETS AND SHOWERHEADS) SHALL COMPLY WITH THE FOLLOWING:

5.303.3.1 WATER CLOSETS. THE EFFECTIVE FLUSH VOLUME OF ALL WATER CLOSETS SHALL OT EXCEED 1.28 GALLONS PER FLUSH. TANK-TYPE WATER CLOSETS SHALL SHALL NOT BE CERTIFIED TO THE PERFORMANCE CRITERIA OF THE U.S. EPA WATERSENSE SPECIFICATION FOR TANK-TYPE TOILETS.

NOTE: THE EFFECTIVE FLUSH VOLUME OF DUAL FLUSH TOILETS IS DEFINED AS THE COMPOSITE, AVERAGE FLUSH VOLUME OF TWO REDUCED FLUSHED AND ONE FULL FLUSH.

5.303.3.2 URINALS. THE EFFECTIVE FLUSH VOLUME OF URINALS SHALL NOT EXCEED 0.5 GALLONS PER FLUSH.

5.303.3.3 SHOWERHEADS.

5.303.3.3.1 SINGLE SHOWERHEAD. SHOWERHEADS SHALL HAVE A MAXIMUM FLOW RATE OF NOT MORE THAN 2.0 GALLONS PER MINUTE AT 80 PSI. SHOWERHEADS SHALL BE CERTIFIED TO THE PERFORMANCE CRITERIA OF THE U.S. EPA WATERSENSE SPECIFICATION FOR SHOWERHEADS.

5.303.3.3.2 MULTIPLE SHOWERHEADS SERVING ONE SHOWER. WHEN A SHOWERIS SERVED BY MORE HAN ONE SHOWERHEAD, THE COMBINED FLOW RATE OF ALL SHOWERHEADS AND/OR OTHER SHOWER OUTLETS CONTROLLED BY A SINGLE VALVE SHALL OT EXCEED 2.0 GALLONS PER MINUTE AT 80 PSI, OR THE SHOWER SHALL BE DESIGNED TO ALLOW NLY ONE SHOWER OUTLET TO BE IN OPERTAION AT A TIME.

NOTE: A HAND-HELD SHOWER SHALL BE CONSIDERED A SHOWERHEAD.

TABLE 5.303.2.3
WATER REDUCTION FIXTURE FLOW RATES

FIXTURE TYPE	MAXIMUM FLOW RATE
Kitchen faucets	1.8 gpm @ 60 psi
Wash fountains	1.8 [rim space (in.)/20 gpm @ 60 psi]
Metering faucets	0.20 gallons/cycle
Metering faucets for wash fountains	.20 [rim space (in.)/20 gpm @ 60 psi]

CALGREEN NOTES

TABLE 5.303.2.2
WATER USE BASELINE[3]

FIXTURE TYPE	BASELINE FLOW RATE	DURATION	DAILY USES	OCCUPANTS[2]
Showerheads	2.0 gpm @ 80 psi	5 min	1	X[a]
Lavatory faucets, nonresidential	0.5 gpm @ 60 psi	25 min	3	X
Kitchen faucets	2.2 gpm @ 60 psi	4 min.	1	X[b]
Replacement aerators	2.2 gpm @ 60 psi			X
Wash fountains	2.2 [rim space (in.)/20 gpm @ 60 psi]			X
Metering faucets	0.25 gallons/cycle	25 min	3	X
Metering faucets for wash fountains	.25 [rim space (in.)/20 gpm @ 60 psi]	25 min		X
Gravity tank-type water closets	1.28 gallons/flush	1 flush	1 male[1] 3 female	X
Flushometer tank water closets	1.28 gallons/flush	1 flush	1 male[1] 3 female	X
Flushometer valve water closets	1.28 gallons/flush	1 flush	1 male[1] 3 female	X
Electromechanical hydraulic water closets	1.28 gallons/flush	1 flush	1 male[1] 3 female	X
Urinals	0.5 gallons/flush	1 flush	2 male	X

Fixture "Water Use" = Flow rate × Duration × Occupants × Daily uses
1. The daily use number shall be increased to three if urinals are not installed in the room.
2. Refer to Table A, Chapter 4, *California Plumbing Code*, for occupant load factors.
   a. Shower use by occupants depends on the type of use of a building or portion of a building, e.g., total occupant load for a health club, but only a fraction of the occupants in an office building as determined by the anticipated number of users.
   b. Nonresidential kitchen faucet use is determined by the occupant load of the area served by the faucet.
3. Use Worksheet WS-1 to calculate baseline water use.

5.303.4 WASTEWATER REDUCTION. [N] EACH BUILDING SHALL REDUCE BY 20 PERCENT WASTEWATER BY ONE OF THE FOLLOWING METHODS:

1. [BSC, DSA-SS] THE INSTALLATIONOF WATER-CONSERVING FIXTURES (WATER CLOSETS, URINALS) MEETING THE CRITERIA ESTABLISHED IN SECTION 5.303.2 OR 5.303.3.
2. [BSC] UTILIZING NONPOTABLE WATER SYSTEM [CAPTURED RAINWATER, GRAYWATER, AND MUNICIPALLY TREATED WASTEWATER (RECYCLED WATER) COMPLYING WITH THE CURRENT EDITION OF THE *CALIFORNIA PLUMBING CODE* OR OTHER METHODS DESCRIBED IN SECTION A5.304.8].

5.303.6 STANDARDS FOR PLUMBING FIXTURES AND FITTINGS. PLUMBING FIXTURES AND FITTINGS SHALL BE INSTALLED IN ACCORDANCE WITH THE *CALIFORNIA PLUMBING CODE,* AND SHALL MEET THE APPLICABLE STANDARDS REFERENCED IN TABLE 1401.1 OF THE *CALIFORNIA PLUMBING CODE* AND IN CHAPTER 6 OF THIS CODE.

SECTION 5.407
WATER RESITANCE AND
MOISTURE MANAGEMENT

5.407.1 WEATHER PROTECTION. PROVIDE WEATHER-RESISTANT EXTERIOR WALL AND FOUNDATION ENVELOPE AS REQUIRED BY *CALIFORNIA BUILDIING CODE* SECTION 1403.2 (WEATHER PROTECTION) AND *CALIFORNIA ENERGY CODE* SECTION 150, (MANDATORY FEATURES AND DEVICES), MANUFACTURER'S INSTALLATION INSTRUCTIONS OR LOCAL ORDINANCE, WHICHEVER IS MORE STRINGENT.

5.407.2 MOISTURE CONTROL. EMPLOY MOISTUE CONTROL MEASURES BY THE FOLLOWING METHODS.

5.407.2.1 SPRINKLERS. DESIGN AND MAINTAIN LANDSCAPE IRRIGATION SYSTEMS TO PREVENT SPRAY ON STRUCTURES.

5.4076.2.2 ENTRIES AND OPENINGS. DESIGN EXTERIOR ENTRIES AND/OR OPENINGS SUBJECT TO FOOT TRAFFIC OR WIND-DRIVEN RAIN TO PREVENT WATER INTRUSION INTO BUILDINGS AS FOLLOWS:

5.407.2.2.1 EXTERIOR DOOR PROTECTION. PRIMARY EXTERIOR ENTRIES SHALL BE COVERED TO PREVENT WATER INTRUSION BY USING NONABSORENT FLOOR AND WALL FINISHES WITHIN AT LEAST 2 FEET AROUND AND PERPENDICULAR TO SUCH OPENINGS PLUS AT LEAST ONE OF THE FOLLOWING:

1. AN INSTALLED AWNING AT LEAST 4 FEET IN DEPTH.
2. THE DOOR IS PROTECTED BY A ROOF OVERHANG AT ELEAST 4 FEET IN DEPTH
3. THE DOOR IS RECESSED AT LEAST 4 FEET.
4. OTHER METHODS WHICH PROVIDE EQUIVALENT PROTECTION.

5.407.2.2.2 FLASHING. INSTALL FLASHINGS INTEGRATED WITH A DRAINAGE PLANE.

SECTION 5.408
CONSTRUCTION WASTE REDUCTION,
DISPOSAL AND RECYCLING

5.408.1 CONSTRUCTION WASTE MANAGEMENT. RECYCLE AND/OR SLAVAGE FOR REUSE A MINIMUM OF 50 PERCENT OF THE NONHAZARDOUS CONSTRUCTION AND DEMOLITION WASTE IN ACCORDANCE WITH SECTION 5.408.1.1, 5.408.1.2 OR 5.408.1.3; OR MEET A LOCAL CONSTRUCTION AND DEMOLITION WASTE MANAGEMENT ORDINANCE, WHICHEVER IS MORE STRAIGHT.

5.408.1.1 CONSTRUCTION WASTE MANAGEMENT PLAN. WHERE A LOCAL JURISDICTION DOES NOT HAVE CONSTRUCTION AND DEMOLITION WASTE MANAGEMENT ORDINANCE THAT IS MORE STRINGENT, SUBMIT A CONSTRUCTION WASTE MANAGEMENT PLAN THAT

1. IDENTIFIES THE CONSTRUCTION AND DEMOLITION WASTE MATERIALS TO BE DIVERTED FROM DISPOSAL BY EFFICIENT USAGE, RECYCLING, REUSE ON THE PROJECT OR SALVAGE FOR FUTURE USE OR SALE.

2. DETERMINES IF CONSTRUCTION AND DEMOLITION WASTE MATERIALS WILL BE SORTED ON-SITE (SOURCE-SEPARATED) OR BULK MIXED (SINGLE STREAM).

3. IDENTIFIES DIVERSION FACILITIES WHERE CONSTRUCTION AND DEMOLITION WASTE MATERIAL COLLECTED WILL BE TAKEN.

4. SPECIFIES THAT THE AMOUNT OF CONSTRUCTION AND DEMOLITION WASTE MATERIALS DIVERTED SHALL BE CALCULATED BY WEIGHT OR VOLUME, BUT NOT BY BOTH.

CALGREEN NOTES

5.408.1.2 WASTE MANAGEMENT COMPANY. UTILIZE A WASTE MANAGEMENT COMPANY THAT CAN PROVIDE VERIFIABLE DOCUMENTATION THAT THE PERCENTAGE OF CONSTRUCTION AND DEMOLITION WASTE MATERIAL DIVERTED FROM THE LANFILL COMPLIES WITH THIS SECTION.

NOTE: THE OWNER OR CONTRACTOR SHALL MAKE THE DETERMINATION IF THE CONSTRUCTION AND DEMOLITION WASTE MATERIAL WILL BE DIVERTED BY A WASTE MANAGEMENT COMPANY.

EXCEPTIONS TO SECTIONS 5.408.1.1 AND 5.408.1.2:

1. EXCAVATED SOIL AND LAND-CLEARING DEBRIS.

2. ALTERNATE WASTE REDUCTION METHODS DEVELOPED BY WORKING WITH LOCAL AGENCIES IF DIVERSION OR RECYCLE FACILITIES CAPABLE OF COMPLIANCE WITH THIS ITEM DO NOT EXIST.

3. DEMOLITION WASTE MEETING LOCAL ORDINANCE OR CALCULATED IN CONSIDERATION OF LOCAL RECYCLING FACILITIES AND MARKETS.

5.408.1.3 WASTE STREAM REDUCTION ALTERNATIVE. THE COMBINED WEIGHT OF NEW CONSTRUCTION DISPOSAL THAT DOES NOT EXCEED TWO POUNDS PER SQUARE FOOT OF BUILDING AREA MAY BE DEEMED TO MEET THE 50 PERCENT MINIMUM REQUIREMENT AS APPROVED BY THE ENFORCING AGENCY.

5.408.1.4 DOCUMENTATION. DOCUMENTATION SHALL BE PROVIDED TO THE ENFORCING AGENCY WHICH DEMONSTRATES COMPLIANCE WITH SECTIONS 5.408.1.1 THROUGH 5.408.1.3. THE WASTE MANAGEMENT PLAN SHALL BE UPDATED AS NECESSARY AND SHALL BE ACCESSIBLE DURING CONSTRUCTION FOR EXAMINATION BY THE ENFORCING AGENCY.

NOTES:

1. SAMPLE FORMS FOUND IN "A GUIDE TO THE CALIFORNIA GREEN BUILDING STANDARDS CODE (NONRESIDENTIAL)" LOCATED AT HTTP://WWW.BSC.CA.GOV/HOME/CALGREEN.ASPX MAY BE USED TO ASSIST IN DOCUMENTING COMPLIANCE WITH THE WASTE MANAGEMENT PLAN.

2. MIXED CONSTRUCTION AND DEMOLITION DEBRIS (C&D) PROCESSORS CAN BE LOCATED AT THE CALIFORNIA DEPARMENT OF RESOURCES RECYCLING AND RECOVERY (CALRECYCLE).

SECTION 5.410
BUILDING MAINTENANCE AND OPERATION

5.410.1 RECYCLING BY OCCUPANTS. PROVIDE READILY ACCESSIBLE AREAS THAT SERVE THE ENTIRE BUILDING AND ARE IDENTIFIED FOR THE DEPOSITING, STORAGE AND COLLECTION OF NON-HAZARDOUS MATERIALS FOR RECYCLING, INCLUDING (AT A MINIMUM) PAPER, CORRUGATED CARDBOARD, GLASS, PLASTICS AND METALS OR MEET A LAWFULLY ENACTED LOCAL RECYLING ORDINANCE, IF MORE RESTRICTIVE.

5.410.1.1 ADDITIONS. [A] ALL ADDITIONS CONDUCTED WITHIN A 12-MONTH PERIOD UNDER SINGLE OR MULTIPLE PERMITS, RESULTING IN AN INCREASE OF 30 PERCENT OR MORE IN FLOOR AREA, SHALL PROVIDE RECYCLING AREAS ON SITE.

EXCEPTION: ADDITIONS WITHIN A TENANT SPACE RESULTING IN LESS THAN A 30-PERCENT INCREASE IN THE TENANT SPACE FLOOR AREA.

5.410.1.2 SAMPLE ORDINANCE. SPACE ALLOCATION FOR RECYCLING AREAS SHALL COMPLY WITH CHAPTER 18, PART 3, DIVISION 30 OF THE *PUBLIC RESOURCES CODE.* CHAPTER 18 IS KNOWN AS THE CALIFORNIA SOLID WASTE REUSE AND RECYLING ACCESS ACT OF 1991 (ACT).

NOTE: A SAMPLE ORDINANCE FOR USE BY LOCAL AGENCIES MAY BE FOUND IN APPENDIX A OF THE DOCUMENT AT THE CALRECYCLE'S WEB SITE.

SECTION 5.504
POLLUTANT CONTROL

5.504.1.3 TEMPORARY VENTILATION. THE PERMANENT HVAC SYSTEM SHALL ONLY BE USED DURING CONSTRUCTION IF NECESSARY TO CONDITION THE BUILDING OR AREAS OF ADDITION OR ALTREATION WITHIN THE REQUIRED TEMPERATURE RANGE FOR MATERIAL AND EQUIPMENT INSTALLATION. IF THE HVAC SYSTEM IS USED DURING CONSTRUCTION, USE RETURN AIR FILTERS WITH A MINIMUM EFFICIENCY REPORTING VALUE (MERV) OF 8, BASED ON ASHRAE 52.2-1999, OR AN AVERAGE EFFICIENCY OF 30 PERCENT BASED ON ASHRAE 52.1-1992. REPLACE ALL FILTERS IMMEDIATELY PRIOR TO OCCUPANCY, OR, IF THE BUILDING IS OCCUPIED DURING ALTERATION, AT THE CONCLUSION OF CONSTRUCTION.

5.504.3 COVERING OF DUCT OPENINGS AND PROTECTION OF MECHANICAL EQUIPMENT DURING CONSTRUCTION. AT THE TIME OF ROUGH INSTALLATION AND DURING STORAGE ON THE CONSTRUCTION SITE UNTIL FINAL STARTUP OF THE HEATING, COOLING AND VENTILATING EQUIPMENT, ALL DUCT AND OTHER RELATED AIR DISTRIBUTION COMPONENT OPENINGS SHALL BE COVERED WITH TAPE, PLASTIC, SHEETMETAL OR OTHER METHODS ACCEPTABLE TO THE ENFORCING AGENCY TO REDUCE THE AMOUNT OF DUST, WATER AND DEBRIS WHICH MAY ENTER THE SYSTEM.

5.504.4 FINISH MATERIAL POLLUTANT CONTROL. FINISH MATERIALS SHALL COMPLY WITH SECTIONS 5.504.4.1 THROUGH 5.504.4.4.

CALGREEN NOTES

TABLE 5.504.4.1
ADHESIVE VOC LIMIT[1,2]
LESS WATER AND LESS EXEMPT COMPOUNDS IN GRAMS PER LITER

ARCHITECTURAL APPLICATIONS	CURRENT VOC LIMIT
Indoor carpet adhesives	50
Carpet pad adhesives	50
Outdoor carpet adhesives	150
Wood flooring adhesive	100
Rubber floor adhesives	60
Subfloor adhesives	50
Ceramic tile adhesives	65
VCT and asphalt tile adhesives	50
Drywall and panel adhesives	50
Cove base adhesives	50
Multipurpose construction adhesives	70
Structural glazing adhesives	100
Single-ply roof membrane adhesives	250
Other adhesive not specifically listed	50
SPECIALTY APPLICATIONS	
PVC welding	510
CPVC welding	490
ABS welding	325
Plastic cement welding	250
Adhesive primer for plastic	550
Contact adhesive	80
Special purpose contact adhesive	250
Structural wood member adhesive	140
Top and trim adhesive	250
SUBSTRATE SPECIFIC APPLICATIONS	
Metal to metal	30
Plastic foams	50
Porous material (except wood)	50
Wood	30
Fiberglass	80

1. If an adhesive is used to bond dissimilar substrates together the adhesive with the highest VOC content shall be allowed.
2. For additional information regarding methods to measure the VOC content specified in this table, see South Coast Air Quality Management District Rule 1168, http://www.arb.ca.gov/DRDB/SC/CURHTML/R1168.PDF.

5.504.4.1 ADHESIVES, SEALANTS AND CAULKS. ADHESIVES, SEALANTS, AND CAULKS USED ON THE PROJECT SHALL MEET THE REQUIREMENTS OF THE FOLLOWING STANDARDS:

1. ADHESIVES, ADHESIVE BONDING PRIMERS, ADHESIVE PRIMERS, SEALANTS, SEALANT PRIMERS AND CAULKS SHALL COMPLY WITH LOCAL OR REGIONAL AIR POLLUTION CONTROL OR AIR QUALITY MANAGEMENT DISTRICT RULES WHERE APPLICABLE, OR SCAQMD RULE 1168 VOC LIMITS, AS SHOWN IN TABLES 5.504.4.1 AND 5.504.4.2. SUCH PRODUCTS ALSO SHALL COMPLY WITH THE RULE 1168 PROHIBITION ON THE USE OF CERTAIN TOXIC COMPOUNDS (CHLOROFORM, ETHYLENE DICHLORIDE, METHYLENE CHLORIDE, PERCHLOROETHYLENE AND TRICHLOROETHYLENE), EXCEPT FOR AEROSOL PRODUCTS AS SPECIFIED IN SUBSECTION 2, BELOW.

2. AEROSOL ADHESIVES, AND SMALLER UNIT SIZE OF ADHESIVES, AND SEALANT OR CAULKING COMPOUNDS (IN UNITS OF PRODUCT, LESS PACKAGING, WHICH DO NOT WEIGH MORE THAN ONE POUND AND DO NOT CONSIST OF MORE THAN 16 FLUID OUNCES) SHALL COMPLY WITH STATEWIDE VOC STANDARDS AND OTHER REQUIREMENTS, INCLUDING PROHIBITIONS ON USE OF CERTAIN TOXIC COMPOUNDS, OF *CALIFORNIA CODE OF REGULATIONS*, TITLE 17, COMMENCING WITH SECTION 94507.

GREG KORN AIA ARCHITECTS

INTERIOR ALTERATION

2525 MOORPARK RD
THOUSAND OAKS, CA 91362

Client
Andrew Mooney, Park Planner
CONEJO RECREATION & PARK DISTRICT
403 W. Hillcrest Drive
Thousand Oaks CA 91360
(805) 495-6471
amooney@crpd.org

Architect
G. Ian Korn, AIA
GKA Architects
351 Rolling Oaks Dr Ste 202
Thousand Oaks, CA 91361
gkorn@gka-arc.com
(805) 370-1300

MEP Engineer
Arash Nazari, PE
A&N Design Group Inc
21550 Oxnard Street #300
Woodland Hills, CA 91367
818-288-4361
arash@an-dg.com

Plan Examiner
TBD
City of Thousand Oaks
Building Division
2100 E Thousand Oaks Blvd
Thousand Oaks, CA 91361
(805) 449-2100

No.	Description	Date
1	Schematic Design to Client	08.07.19
2	Schematic Design to Client- Storage	08.27.19
3	Building Dept Submittal	09.23.19
4	Building Dept Corrections	10.25.19
5	Public Works Corrections	11.07.19
6	CDs to Client-Storage	01.13.20
7	CDs to Client-Storage Rev	01.21.20

Project number	2019003
Date	01.21.20
Drawn by	GK
Checked by	GK

Drawing Name
CAL GREEN NOTES

Drawing No.
G-104.00

NOTE: DO NOT SCALE DRAWINGS
Scale AS NOTED

CALGREEN NOTES

TABLE 5.504.4.2
SEALANT VOC LIMIT
LESS WATER AND LESS EXEMPT COMPOUNDS IN GRAMS PER LITER

SEALANTS	CURRENT VOC LIMIT
Architectural	250
Marine deck	760
Nonmembrane roof	300
Roadway	250
Single-ply roof membrane	450
Other	420
SEALANT PRIMERS	
Architectural	
Nonporous	250
Porous	775
Modified bituminous	500
Marine deck	760
Other	750

Note: For additional information regarding methods to measure the VOC content specified in these tables, see South Coast Air Quality Management District Rule 1168.

5.504.4.3 PAINTS AND COATINGS. ARCHITECTURAL PAINTS AND COATINGS SHALL COMPLY WITH VOC LIMITS IN TABLE 1 OF THE ARB ARCHITECTURAL COATINGS SUGGESTED CONTROL MEASURE, AS SHOWN IN TABLE 5.504.4.3, UNLESS MORE STRINGENT LOCAL LIMITS APPLY. THE VOC CONTENT LIMIT FOR COATINGS THAT DO NOT MEET THE DEFINITIONS FOR THE SPECIALTY COATINGS CATEGORIES LISTED IN TABLE 5.504.4.3 SHALL BE DETERMINED BY CLASSIFYING THE COATING AS A FLAT, NONFLAT OR NONFLAT-HIGH CLOSS COATING, BASED ON ITS GLOSS, AS DEFINED IN SUBSECTIONS 4.21, 4.36 AND 4.37 OF THE 2007 CALIFORNIA AIR RESOURCES BOARD SUGGESTED CONTROL MEASURE, AND THE CORRESPONDING FLAT, NONFLAT OR NONFLAT-HIGH GLOSS VOC LIMIT IN TABLE 5.504.4.3 SHALL APPLY.

TABLE 5.504.4.3
VOC CONTENT LIMITS FOR ARCHITECTURAL COATINGS[2,3]
GRAMS OF VOC PER LITER OF COATING.
LESS WATER AND LESS EXEMPT COMPOUNDS

CALGREEN NOTES

TABLE 5.504.4.3
VOC CONTENT LIMITS FOR ARCHITECTURAL COATINGS[2,3]
GRAMS OF VOC PER LITER OF COATING.
LESS WATER AND LESS EXEMPT COMPOUNDS

COATING CATEGORY	CURENT LIMIT
Flat coatings	50
Nonflat coatings	100
Nonflat high gloss coatings	150
Specialty Coatings	
Aluminum roof coatings	400
Basement specialty coatings	400
Bituminous roof coatings	50
Bituminous roof primers	350
Bond breakers	350
Concrete curing compounds	350
Concrete/masonry sealers	100
Driveway sealers	50
Dry fog coatings	150
Faux finishing coatings	350
Fire resistive coatings	350
Floor coatings	100
Form-release compounds	250
Graphic arts coatings (sign paints)	500
High-temperature coatings	420
Industrial maintenance coatings	250
Low solids coatings[1]	120
Magnesite cement coatings	450
Mastic texture coatings	100
Metallic pigmented coatings	500
Multicolor coatings	250
Pretreatment wash primers	420
Primers, sealers and undercoaters	100
Reactive penetrating sealers	350
Recycled coatings	250
Roof coatings	50
Rust preventative coatings	250
Shellacs:	
Clear	730
Opaque	550
Specialty primers, sealers and undercoaters	100
Stains	250
Stone consolidants	450
Swimming pool coatings	340
Traffic marking coatings	100
Tub and tile refinish coatings	420
Waterproofing membranes	250
Wood coatings	275
Wood preservatives	350
Zinc-rich primers	340

1. Grams of VOC per liter of coating, including water and including exempt compounds.
2. The specified limits remain in effect unless revised limits are listed in subsequent columns in the table.
3. Values in this table are derived from those specified by the California Air Resources Board, Architectural Coatings Suggested Control Measure, February 1, 2008. More information is available from the Air Resources Board.

5.504.4.3.1 AEROSOL PAINTS AND COATINGS. AEROSOL PAINTS AND COATINGS SHALL MEET THE PWMIR LIMITS FOR ROC IN SECTION 94522(A)(3) AND OTHER REQUIREMENTS, INCLUDING PROHIBITIONS ON USE OF CERTAIN TOXIC COMPOUNDS AND OZONE DEPLETING SUBSTANCES, IN SECTIONS 94522(C)(2) AND (D)(2) OF *CALIFORNIA CODE OF REGULATIONS*, TITLE 17, COMMENCING WITH SECTION 94520; AND N AREAS UNDER THE JURISDICTION OF THE BAY AREA AIR QUALITY MANAGEMENT DISTRICT ADDITIONALLY COMPLY WITH THE PERCENT VOC BY WEIGHT OF PRODUCT LIMITS OF REGULATION 8 RULE 49

5.504.4.3.2 VERIFICATION. VERIFICATION OF COMPLIANCE WITH THIS SECTION SHALL BE PROVIDED AT HE REQUEST OF THE ENFORCING AGENCY. DOCUMENTATION MAY INCLUDE, BUT IS NOT LIMITED TO, THE FOLLOWING:

1. MANUFACTURE'S PRODUCT SPECIFICATION

2. FIELD VERIFICATION OF ON-SITE PRODUCT CONTAINERS.

5.504.4.5 COMPOSITE WOOD PRODUCTS. HARDWOOD PLYWOOD, PARTICLEBOARD AND MEDIUM DENSITY FIBERBOARD COMPOSITE WOOD PRODUCTS USED ON HE INTERIOR OR EXTERIOR OF THE UILDING SHALL MEET THE REQUIREMENTS FOR FORMALDEHYDE AS SPECIFIED IN ARB'S AIR TOXICS CONTROL MEASURE (ATCM) FOR COMPOSITE WOOD (17 CCR 93120 ET SEQ.) THOSE MATERIALS NOT EXEMPTED UNDER THE ATCM MUST MEET THE SPECIFIED EMISSION LIMITS, AS SHOWN IN TABLE 5.504.4.5.

CALGREEN NOTES

5.504.4.5.1 EARLY COMPLIANCE. RESERVED

5.504.4.5.3 DOCUMENTATION. VERIFICATION OF COMPLIANCE WITH THIS SECTION SHALL BE PROVIDED AS REQUESTED BY THE ENFORCING AGENCY. DOCUMENTATION SHALL INCLUDE AT LEAST ONE OF THE FOLLOWING:

1. PRODUCT CERTIFICATIONS AND SPECIFICATIONS.

2. CHAIN OF CUSTODY CERTIFICATIONS.

3. PRODUCT LABELED AND INVOICED AS MEETING THE COMPOSITE WOOD PRODUCTS REGULATION (SEE CCR, TITLE 17, SECTION 93120, ET SEQ.).

4. EXTERIOR GRADE PRODUCTS MARKED AS MEETING THE PS-1 OR PS-2 STANDARDS OF THE ENGINEERED WOOD ASSOCIATION, THE AUSTRALIAN AS/NZS 2269 OR EUROPEAN 636 3S STANDARDS.

5. OTHER METHODS ACCEPTABLE TO THE ENFORCING AGENCY.

TABLE 5.504.4.5
FORMALDEHYDE LIMITS[1]
MAXIMUM FORMALDEHYDE EMISSIONS IN PARTS PER MILLION.

PRODUCT	CURRENT LIMIT
Hardwood plywood veneer core	0.05
Hardwood plywood composite core	0.05
Particle board	0.09
Medium density fiberboard	0.11
Thin medium density fiberboard[2]	0.13

1. Values in this table are derived from those specified by the California Air Resources Board, Air Toxics Control Measure for Composite Wood as tested in accordance with ASTM E 1333. For additional information, see *California Code of Regulations*, Title 17, Sections 93120 through 93120.12.
2. Thin medium density fiberboard has a maximum thickness of 5/16 inches (8 mm).

5.504.4.6 RESILIENT FLOORING SYSTEMS. FOR 80 PERCENT OF FLOOR AREA RECEIVING RESILIENT FLOORING, INSTALLED RESILIENT FLOORING SHALL MEET AT LEAST ONE OF THE FOLLOWING:

1. CERTIFIED UNDER THE RESILIENT FLOOR COVERING INSTITUTE (RFCI) FLOORSCORE PROGRAM;

2. COMPLIANT WITH THE VOC-EMISSION LIMITS AND TESTING REQUIREMENTS SPECIFIED IN THE CALIFORNIA DEPARTMENT OF PUBLIC HEALTH'S 2010 STANDARD METHOD FOR THE TESTING AND EVALUATION CHAMBERS, VERSION 1.1, FEBRUARY 2010;

3. COMPLIANT WITH THE CALIFORNIA COLLABORATIVE FOR HIGH PERFORMANCE SCHOOLS (CA-CHPS) CRITERIA INTERPRETATION FOR EQ 2.2 DATED JULY 2012 AND LISTED IN THE CHPS HIGH PERFORMANCE PRODUCT DATABSE; OR

4. COMPLIANT WITH CDPH CRITERIA AS CERTIFIED UNDER THE GREENGUARD CHILDREN'S & SCHOOLS PROGRAM.

5.504.4.6.1 VERIFICATION OF COMPLIANCE. DOCUMENTATION SHALL BE PROVIDED VERIFYING THAT RESILIENT FLOORING MATERIALS MEET THE POLLUTANT EMISSION LIMITS.

5.504.5.3 FILTERS. IN MECHANICALLY VENTILATED BUILDINGS, PROVIDE REGULARLY OCCUPIED AREAS OF THE BUILDING WITH AIR FILTRATION MEDIA FOR OUTSIDE AND RETURN AIR THAT PROVIDES AT LEAST A MINIMUM EFFICIENCY REPORTING VALUE (MERV) OF 8. MERVE 8 FILTERS SHALL BE INSTALLED PRIOR TO OCCUPANCY, AND RECOMMENDATIONS FOR MAINTENANCE WITH FILTERS OF THE SAME VALUE SHALL BE INCLUDED IN THE OPERATION AND MAINTENANCE MANUAL.

EXCEPTIONS:

1. AN ASHRAE 10-PERCENT TO 15-PERCENT EFFICIENCY FILTER SHALL BE PERMITTED FOR AN HVAC UNIT MEETING THE 2013 *CALIFORNIA ENERGY CODE* HAVING 60,000 BTU/H OR LESS CAPACITY PER FAN COIL, IF THE ENERGY USE OF THE AIR DELIVERY SYSTEM IS 0.4 W/CFM OR LESS AT DESIGN AIR FLOW.

2. EXISTING MECHANICAL EQUIPMENT.

5.504.5.3.1 LABELING. INSTALLED FILTERS SHALL BE CLEARLY LABELED BY THE MANUFACTURER INDICATING THE MERV RATING.

CALGREEN NOTES

SECTION 5.505
INDOOR MOISTURE CONTROL

5.505.1 INDOOR MOISTURE CONTROL. BUILDINGS SHALL MEET OR EXCEED THE PROVISIONS OF *CALIFORNIA BUILDING CODE*, CCR, TITLE 24, PART 2, SECTIONS 1203 (VENTILATION) AND CHAPTER 14 (EXTERIOR WALLS). FOR ADDITIONAL MEASURES NOT APPLICABLE TO LOW-RISE RESIDENTIAL OCCUPANCIES, SEE SECTION 5.407.2 OF THE CODE.

SECTION 5.506
INDOOR AIR QUALITY

5.506.1 OUTSIDE AIR DELIVERY. FOR MECHANICALLY OR NATURALLY VENTILATED SPACES IN BUILDINGS MEET THE MINIMUM REQUIREMENTS OF SECTION 120.1 (REQUIREMENTS FOR VENTILATION) OF THE 2013 *CALIFORNIA ENERGY CODE*, OR THE APPLICABLE LOCAL CODE, WHICHEVER IS MORE STRINGENT, AND DIVISION 1, CHAPTER 4 OF CCR, TITLE 8.

5.506.2 CARBON DIOXIDE (CO_2) MONITORING. FOR BUILDINGS OR ADDITIONS EQUIPPED WITH DEMAND CONTROL VENTILATION, CO_2 SENSORS AND VENTILATION CONTROLS SHALL BE SPECIFIED AND INSTALLED IN ACCORDANCE WITH THE REQUIREMENTS OF THE 2013 *CALIFORNIA ENERGY CODE*, SECTION 120(C)(4).

POWER & SIGNAL NOTES

A. PROVIDE 1-HOUR FIRE PROTECTION AT ALL OUTLETS AND SWITCHES LOCATED IN 1-HOUR RATED PARTITIONS.

B. ALL TELEPHONE AND DATA CABLE TO BE TEFLON COATED PLENUM RATED CABLE, SUPPORTED INDEPENDENTLY FROM SUSPENDED CEILING SYSTEM. CABLING TO BE SUPPLIED BY TENANT, ALL PULLS AND TERMINATIONS BY GENERAL CONTRACTOR.

C. ALL SEPARATE CIRCUIT RECEPTACLE TO BE ORANGE COLOR WITH GRAY STAINLESS STEEL COVER PLATE.

D. ~~ALL NEW WALL MOUNTED OUTLETS TO BE CENTERED AT +18" AFF, U.O.N.~~

E. ALL OUTLETS TO BE INSTALLED AT LOCATIONS SHOWN BY DIMENSIONS ON THE POWER AND S/GNAL PLAN. DIMENSION ALL OUTLETS FROM THE CENTER LINE OF THE OUTLET BOX. NON-DIMENSIONED OUTLETS ARE TO BE LOCATED AT THE NEAREST WALL STUD.

F. WHEN OUTLETS ARE GROUPED TOGETHER (2 OR MORE), THEY ARE TO E SPACES NO MORE THAN 2" APART.

G. COORDINATE TELEPHONE/DATA INSTALLATION WITH APPROPRIATE SUB-CONTRACTOR

H. WHERE ELECTRICAL WORK IS SPECIFIED IN CONJUNCTION WITH CABINET WORK, LAMPS AND FIXTURES ARE TO BE PROVIDED BY THE GENERAL CONTRACTOR.

I. CUT-OUTS FOR SWITCHES, OUTLETS, ETC. AS REQUIRED BY THE CABINET CONTRACTOR ARE TO BE COORDINATED WITH THE ELECTRICAL CONTRACTOR, U.O.N. ALL RECEPTACLES WHERE MILLWORK OCCURS SHALL BE LOCATED PER ELEVATIONS OF THE MILLWORK ITEM IN QUESTION.

J. ALL WALL COVER PLATES SHALL BE BRUSHED STAINLESS STEEL & GRAY OUTLETS. CUTOUTS FOR SWITCHES, OUTLETS, ETC. AS REQUIRED BY THE CABINET CONTRACTOR ARE TO BE COORDINATED WITH THE ELECTRICAL CONTRACTOR, U.O.N. ALL RECEPTACLES WHERE MILLWORK OCCURS SHALL BE LOCATED PER ELEVATIONS OF THE MILLWORK ITEM IN QUESTION.

K. LOCATIONS OF FURNITURE POWER FEEDS SHALL ACCOMMODATE CIRCUITS & WIRE PER ELECTRICAL DRAWINGS, TENANT SHALL BE RESPONSIBLE FOR PROVIDING FURNITURE POWER FEED. GENERAL CONTRACTOR SHALL INSTALL THE POWER FEED.

L. WHERE DEDICATED ELECTRICAL OUTLETS ARE NOTED WITHIN THE FURNITURE PANEL SYSTEM, THE PANEL SYSTEM SHALL ACCOMMODATE THIS REQUIREMENT.

M. ALL EXISTING ELECTRICAL DEVICES ARE TO REMAIN U.O.N.

N. WHERE EXIT SIGNS ARE REQUIRED BY APPLICABLE CODE, THEY SHALL BE ILLUMINATED PER SECTION 1012 AND 1994 N.E.C. THE LOCATION SHALL BE COORDINATED WITH THE ARCHITECT.

O. PROVIDE BACK-UP POWER FOR EXIT SIGNS PER APPLICABLE CODE.

P. EMERGENCY LIGHTING SHALL BE 2 SEPARATE SOURCES OF POWER AND SHALL COMPLY WITH THE NEC.

Q. WHEN PLYWOOD BACKBOARDS ARE REQUIRED IN TELEPHONE AND ELECTRICAL EQUIPMENT ROOMS, THEY SHALL BE PAINTED TO MATCH ADJACENT WALL.

R. THE CENTER OF SWITCHES SHALL BE NO MORE THAN 48 INCHES ABOVE THE FLOOR, VERIFY AND MATCH EXISTING.

S. CENTER LINE OF 15, 20, AND 30 AMP RECEPTACLES SHALL NOT BE LESS THAN 18 INCHES CENTERED ABOVE FLOOR. FLOOR OUTLETS ARE ACCEPTABLE NEXT TO SLIDING PANELS/WALLS AND OTHER SPECIAL CONVENIENT LOCATIONS.

T. EXIT ILLUMINATION SHALL BE FROM AN EMERGENCY SYSTEM WHERE EXITING SYSTEM SERVES AN OCCUPANT LOAD OF 100 OR MORE.

U. THE CENTER OF RECEPTACLE OUTLETS SHALL NOT BE LESS THAN 12 INCHES ABOVE THE FLOOR OR WORKING PLATFORM.

GREG KORN AIA ARCHITECTS

INTERIOR ALTERATION

2525 MOORPARK RD
THOUSAND OAKS, CA 91362

Client
Andrew Mooney, Park Planner
CONEJO RECREATION & PARK DISTRICT
403 W. Hillcrest Drive
Thousand Oaks CA 91360
(805) 495-6471
amooney@crpd.org

Architect
G. Ian Korn, AIA
GKA Architects
351 Rolling Oaks Dr Ste 202
Thousand Oaks, CA 91361
gkorn@gka-arc.com
(805) 370-1300

MEP Engineer
Arash Nazari, PE
A&N Design Group Inc
21550 Oxnard Street #300
Woodland Hills, CA 91367
818-288-4361
arash@an-dg.com

Plan Examiner
TBD
City of Thousand Oaks
Building Division
2100 E Thousand Oaks Blvd
Thousand Oaks, CA 91361
(805) 449-2100

No.	Description	Date
1	Schematic Design to Client	08.07.19
2	Schematic Design to Client- Storage	08.27.19
3	Building Dept Submittal	09.23.19
4	Building Dept Corrections	10.25.19
5	Public Works Corrections	11.07.19
6	CDs to Client-Storage	01.13.20
7	CDs to Client-Storage Rev	01.21.20

Project number	2019003
Date	01.21.20
Drawn by	GK
Checked by	GK

Drawing Name
CAL GREEN & FIRE PROT'N NOTES

Drawing No.
G-105.00

NOTE: DO NOT SCALE DRAWINGS
Scale AS NOTED

DEMOLITION NOTES

1. THE GENERAL CONTRACTOR SHALL FURNISH ALL THE LABOR AND THE MATERIALS AS REQUIRED TO COMPLETE DEMOLITION AND REMOVAL OF ALL ITEMS SHOWN ON THE PLANS
2. THE GENERAL CONTRACTOR SHALL SUBMIT HIS PROPOSAL BASED ON EXECUTING ALL WORK WITHIN THE REGULATIONS OF THE BUILDING FOR DEMOLITION AND REMOVAL OF DEBRIS. THIS SHALL INCLUDE ANY OVERTIME WORK REQUIRED, NOISY DEMOLITION WORK, ETC.
3. ALL WORK DEMOLISHED SHALL BE REMOVED FROM THE PREMISES EXCEPT ITEMS TO BE REUSED OR RETURNED TO OWNER UNLESS OTHERWISE DIRECTED.
4. THE GENERAL CONTRACTOR SHALL REMOVE ALL WALL CONDUITS LEFT AFTER WALL DEMOLITION, INCLUDING SWITCHBOXES, PLATES, BRIDGES, ANY OTHER TELEPHONE OR ELECTRICAL WIRING, PLUMBING OR OTHER EQUIPMENT.
5. THE GENERAL CONTRACTOR SHALL ERECT ALL NECESSARY PLASTIC DROP CLOTH PARTITIONS, TO PROTECT ADJACENT AREA AND/OR BUILDING PROPERTY WHILE DEMOLITION AND CONSTRUCTION IS IN PROGRESS.
6. THE GENERAL CONTRACTOR SHALL AT ALL TIMES PROTECT THE PROPERTY OF THE BUILDING OWNER, INCLUDING BUT NOT LIMITED TO WINDOWS, FLOOR AND CEILING TILE, PUBLIC TOILETS, ELEVATORS, DOORS, BUCKS, ELECTRICAL AND AIR CONDITIONING EQUIPMENT, PERIPHERAL ENCLOSURES, ETC.
7. THE GENERAL CONTRACTOR SHALL FURNISH A SYSTEM OF TEMPORARY LIGHTS THROUGHOUT THE SPACE UNDER CONSTRUCTION, IF REQUIRED.
8. THE GENERAL CONTRACTOR SHALL CAP AND FLUSH OFF BEHIND FINISHED SURFACES ALL PROJECTING PLUMBING, GAS LINES, AND FLOOR ELECTRICAL/TELEPHONE OUTLETS, AND ALL OTHER PROJECTING ITEMS WHICH ARE BEING ABANDONED.
9. NO EXISTING SMOKE DETECTOR, PUBLIC ADDRESS SPEAKER, FIRE ALARM BOX, OR SIMILAR DEVICE, INCLUDING THE ASSOCIATED WIRING SHALL BE DAMAGED DURING DEMOLITION AND SUBSEQUENT CONSTRUCTION.
10. NO ACTIVE SMOKE DETECTOR SHALL BE COVERED OR OTHERWISE RENDERED INEFFECTIVE FOR ITS INTENDED PURPOSE.
11. ALL ACTIVE SMOKE DETECTION, PUBLIC ADDRESS AND FIRE ALARM SYSTEMS, SHALL BE MAINTAINED BY THE CONTRACTOR DURING DEMOLITION AND CONSTRUCTION. ANY DAMAGES TO THESE SYSTEMS, AS A RESULT OF DEMOLITION OR CONSTRUCTION, SHALL BE PREPARED BY THE CONTRACTOR; REPAIRS SHALL BE MADE TO THE SATISFACTION OF THE AUTHORITIES HAVING JURISDICTION.
12. ALL EXISTING SMOKE DETECTORS, PUBLIC ADDRESS SPEAKERS, AND FIRE ALARM SYSTEMS INCLUDING ASSOCIATED JUNCTION BOXES SHALL BE CLEARLY IDENTIFIED DURING AND AFTER CONSTRUCTION. CEILING ACCESS SHALL REMAIN OPEN WHERE REQUIRED UNTIL FINAL INSPECTION IS PERFORMED.
13. ALL EXISTING SMOKE DETECTORS SHALL BE CLEANED AND TESTED BY AN APPROVED FIRE PROTECTION ORGANIZATION.
14. ALL EXISTING FIRE SPRINKLERS SHALL BE LEFT TO REMAIN DURING DEMO PHASE.
15. UPON COMPLETION OF THE DEMOLITION WORK, THE DEMOLITION CONTRACTOR SHALL PROVIDE THAT ALL AREAS BE LEFT BROOM CLEAN.
16. DEMOLITION PLANS SHOW ITEMS THAT ARE TO BE REMOVED AND ITEMS TO REMAIN. HOWEVER, IT IS THE RESPONSIBILITY OF THE GENERAL CONTRACTOR, PRIOR TO ANY WALL OR CEILING DEMOLITION TO VERIFY IF ANY ACTIVE PIPING, DUCTWORK, AND OR ELECTRICAL WIRING EXISTS THAT MIGHT GET IN THE WAY OF DEMOLITION. THE GENERAL CONTRACTOR MUST ALWAYS USE STANDARD SAFETY METHODS AND MEANS DURING DEMOLITION TO ENSURE PROTECTION FROM BODILY

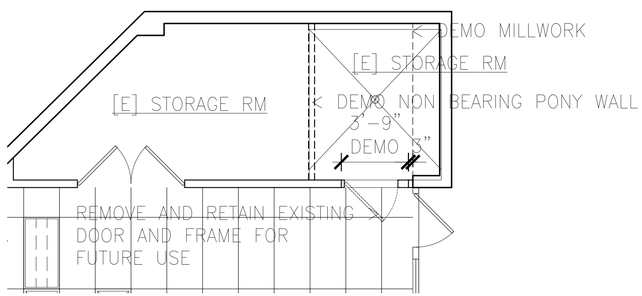

4 **AREA OF WORK DEMO PLAN** SCALE 1/4" = 1'-0"

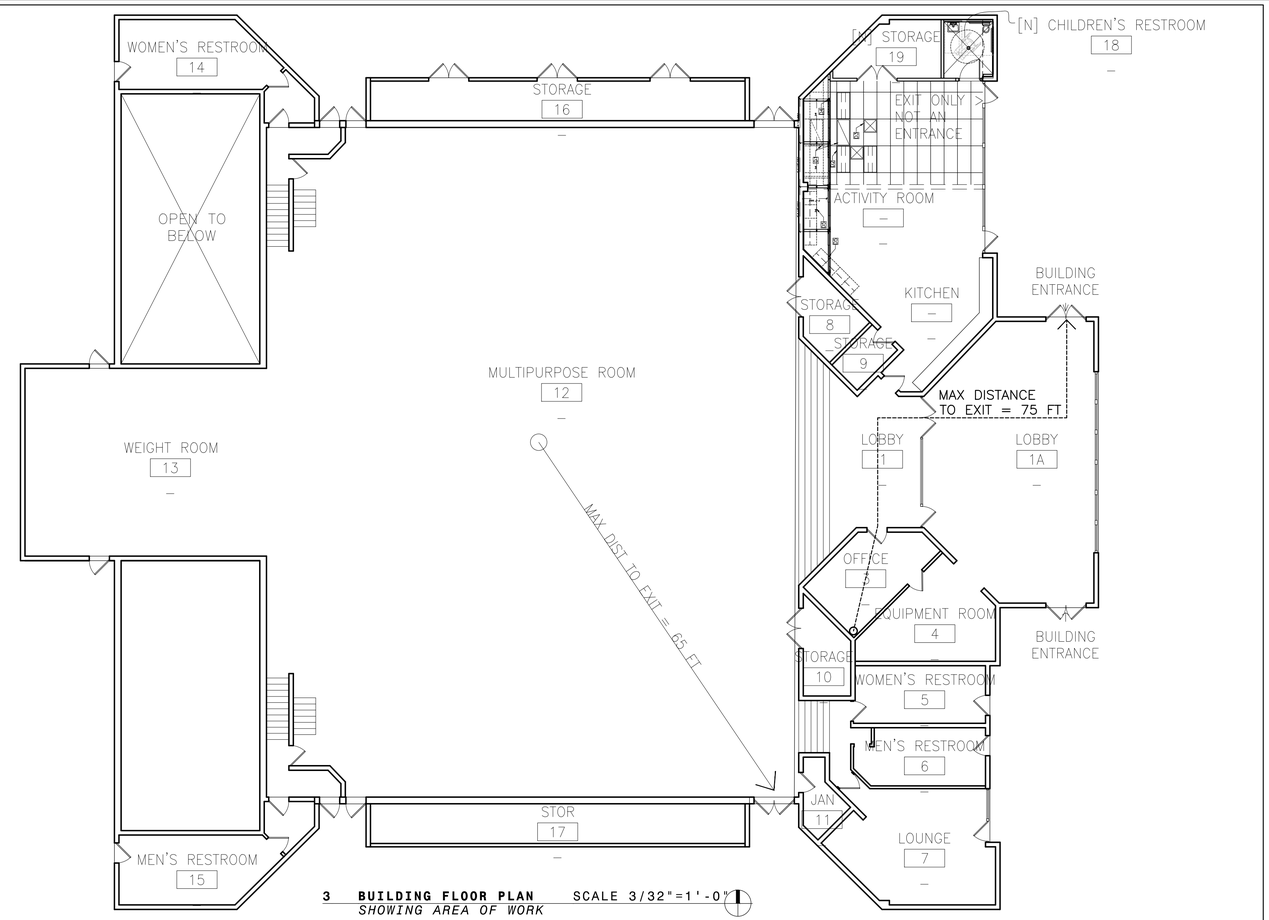

3 **BUILDING FLOOR PLAN** SCALE 3/32"=1'-0"
SHOWING AREA OF WORK

RCP LEGEND

- SUPPLY REGISTER SEE MECH DWGS
- 6" DIA RECESSED LED LIGHT FIXTURE SEE ELEC DWGS
- TOILET EXHAUST FAN SEE MECH DWGS

NOTE
SEE M/E/P DRAWINGS FOR ALL HVAC, PLUMBING, AND LIGHTING/ELECTRICAL INFORMATION
INCLUDING LIGHTING PLANS, HVAC SUPPLY AND RETURN REGISTER LAYOUTS, AND ELECTRICAL PLANS

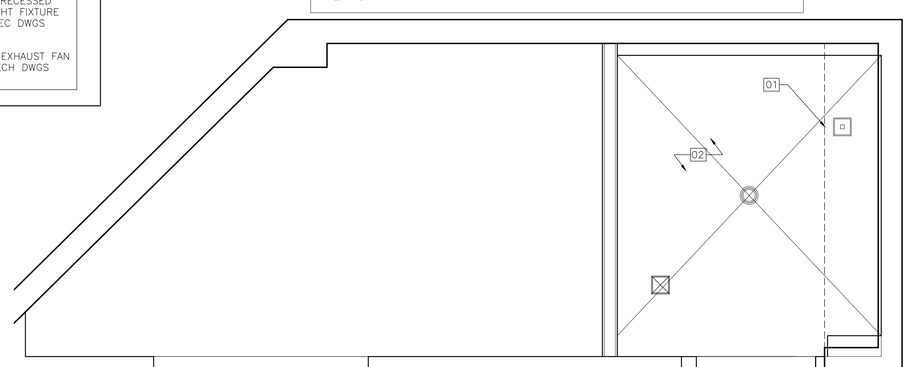

RCP KEYNOTES

01 LINE OF BUILDING SOFFIT WALL, VERIFY CLEARANCES FOR TOILET EXHAUST FAN IN FIELD

02 [N] GYPSUM WALLBOARD CEILING

2 **AREA OF WORK REFLECTED CEILING PLAN** SCALE 1/2" = 1'-0

FLOOR PLAN LEGEND

- [N] METAL STUD PARTITION. SEE DTL 1/A501
- [N] METAL STUD FURRING O/ [E] CMU WALL

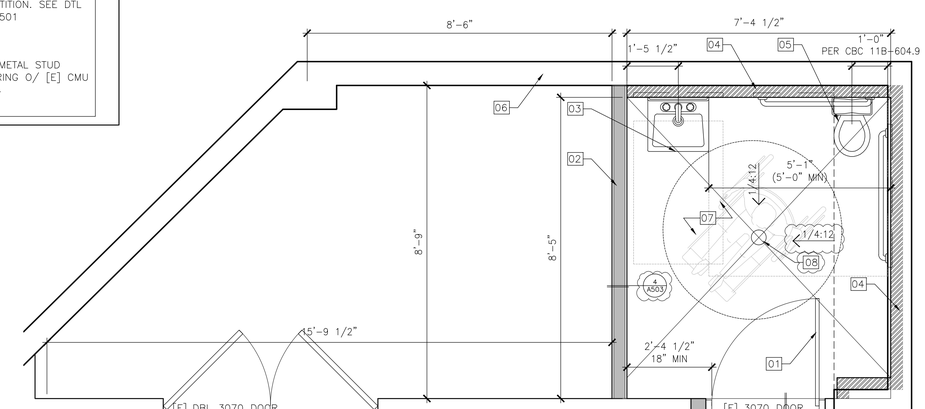

FLOOR PLAN KEYNOTES

01 FLIP [E] DOOR IN [E] FRAME ADD SIGNAGE TO OUTSIDE FACE PER 5/A502

02 [N] METAL STUD & GWB PARTITION WALL

03 [N] CHILDREN'S SINK

08 [N] FLOOR DRAIN PER PLMB DRAWINGS

04 [N] FLOOR TO CEILING METAL STUD & DRYWALL FURRING W/ INFILL BATT INSULATION

05 [N] CHILDREN'S TOILET SEE PLMB DRAWINGS FOR SPEC

06 [E] CMU EXTERIOR WALL

07 [N] FLOOR TILE OVER SLOPED MORTAR BED O/ [E] CONC SLAB (REMOVE TOP 1" +/-, VIF)

1 **AREA OF WORK FLOOR PLAN** SCALE 1/2" = 1'-0"

GREG KORN AIA ARCHITECTS

INTERIOR ALTERATION

2525 MOORPARK RD
THOUSAND OAKS, CA 91362

Client
Andrew Mooney, Park Planner
CONEJO RECREATION & PARK DISTRICT
403 W. Hillcrest Drive
Thousand Oaks CA 91360
(805) 495-6471
amooney@crpd.org

Architect
G. Ian Korn, AIA
GKA Architects
351 Rolling Oaks Dr Ste 202
Thousand Oaks, CA 91361
gkorn@gka-arc.com
(805) 370-1300

MEP Engineer
Arash Nazari, PE
A&N Design Group Inc
21550 Oxnard Street #300
Woodland Hills, CA 91367
818-288-4361
arash@an-dg.com

Plan Examiner
TBD
City of Thousand Oaks
Building Division
2100 E Thousand Oaks Blvd
Thousand Oaks, CA 91361
(805) 449-2100

No.	Description	Date
1	Schematic Design to Client	08.07.19
2	Schematic Design to Client- Storage	08.27.19
3	Building Dept Submittal	09.23.19
4	Building Dept Corrections	10.25.19
5	Public Works Corrections	11.07.19
6	CDs to Client- Storage	01.13.20
7	CDs to Client- Storage Rev	01.21.20

Project number	2019003
Date	01.21.20
Drawn by	GK
Checked by	GK

Drawing Name
PROPOSED AND DEMO PLANS

Drawing No. PW1
A-101.00

NOTE: DO NOT SCALE DRAWING
Scale AS NOTED

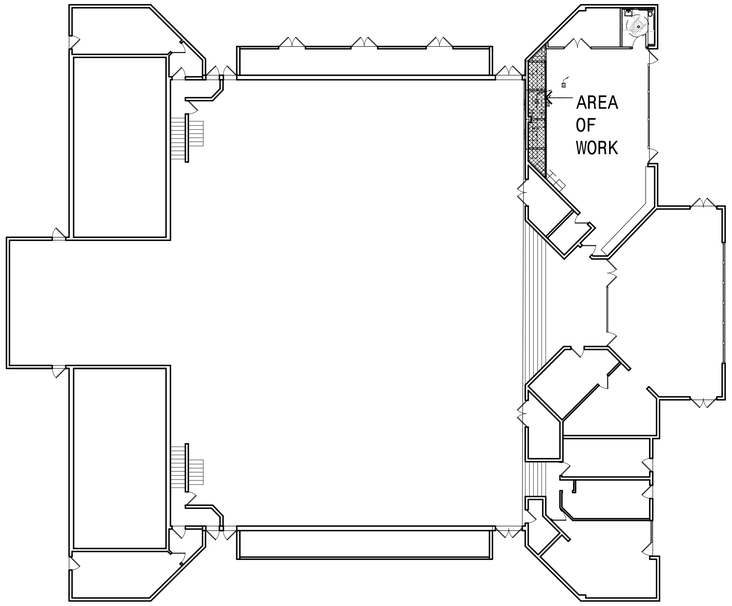

4 **BUILDING FLOOR PLAN** SCALE 1/16"=1'-0"
SHOWING AREA OF WORK

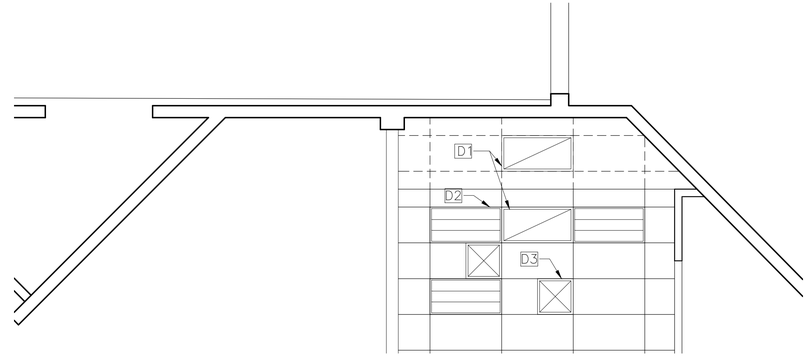

3 **AREA OF WORK DEMO RCP** SCALE 1/4" = 1'-0"

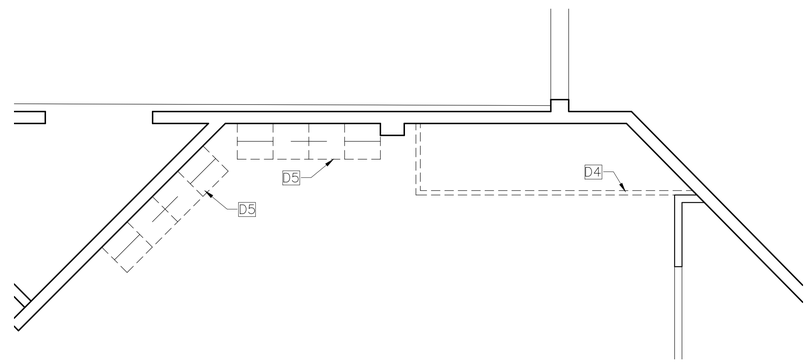

2 **AREA OF WORK DEMO PLAN** SCALE 1/4" = 1'-0"

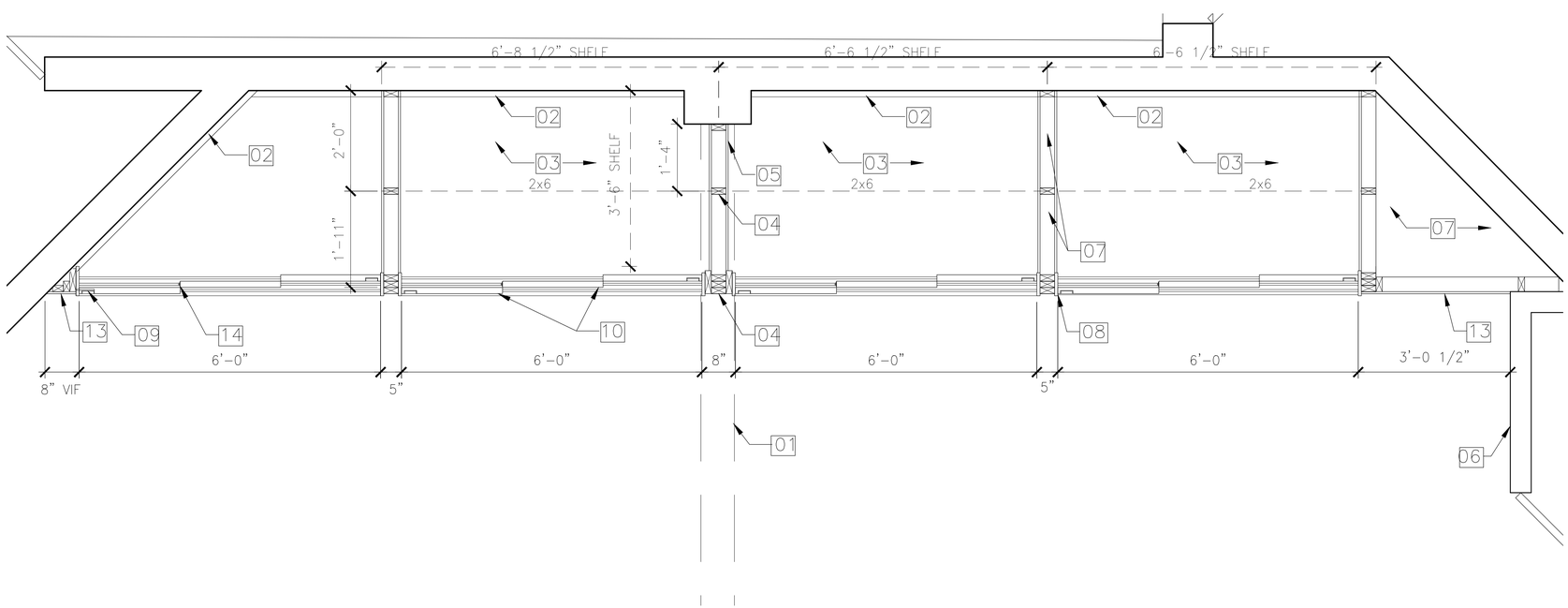

1 **AREA OF WORK PROPOSED FLOOR PLAN** SCALE 1/2" = 1'-0"

DEMOLITION KEYNOTES

D1 RELOC [E] RETURN REGISTER TO NEW LOCATION TO MAKE ROOM FOR [N] STORAGE LOCKERS

D2 [E] LIGHTING TO REMAIN

D3 [E] SUPPLY REGISTER TO REMAIN

D4 [E] STORAGE CLOSET TO BE DEMOLISHED

D5 [E] UPPER AND LOWER CABINETS TO BE DEMOLISHED

D6 [E] 1x6" CONCRETE STRIP TO BE CUT& GROUND FOR BOTTOM TRACK

HARDWARE SPECIFICATIONS

TT01 DESCR: TOP TRACK
MFR: JOHNSON
MDL: 200-0072
MATL: ALUM;
FINISH: MILL
SIZE: 72"

WH01 DESCR: WHEEL HANGER
MFR: JOHNSON
MDL: 2020
LOAD: 200 LBS

TS01 DESCR: TRACK STOP
MFR: JOHNSON
MDL: 100

DH01 DESCR: POCKET DOOR PULL AND MORTISE LOCK
MFR: EMKAY
MDL: 2113

BT01 DESCR: BOTTOM TRACK
MFR: JOHNSON
MDL: 1050-0072
MATL: ALUM;
FINISH: MILL
SIZE: 72"

NOTES: 1) BOTTOM TRACK TO BE SECURED TO CONCRETE WITH CONC ANCHORS PER MANUF. RECOMMENDATIONS
2) INFILL BETWEEN TRACKS WITH LW CONC PATCH TO MATCH [E]

BG01 DESCR: BOTTOM GUIDE
MFR: JOHNSON
MDL: 1705

NOTES

1 ALL FRAMING TO BE DOUGLAS FIR #2 GRADE A
2 PRIME AND PAINT ALL EXPOSED FINISHES. COLOR AND FINISH BY OWNER

FRAMING KEYNOTES

01 [E] BEAM ABOVE

02 2x6 LEDGER W/ HILTI CMU WALL ANCHORS SPACED 8" O.C. STAGGERED 3" ON LEDGER CENTERLINE.

03 3/4" PLYWOOD DECK O/ 2x6 SHELF JOISTS PER PLAN, W 2 1/2" DECK SCREWS SPACED 12" OC IN SHELF JOISTS

04 2x4 STUD FRAMING w 8d NAILS

05 1/2" PLYWOOD SHEATHING

06 SOLID BLOCKING AT MID HEIGHT OF WALL FRMG

07 ANCHOR BOLTS DRILLED AND EXPOXIED IN CONCRETE THROUGH BOTTOM PLATE @ 16" OC

FINISH, MILWORK & HARDWARE KEYNOTES

08 1x DOOR FRAME ATTACHED TO CLOSET FRAMING WITH FINISH NAILS

09 DOOR PULL AND MORTISE LOCK

10 PAINTED 1 1/2" x 36x80" SOLID CORE WD SLIDING DOOR

11 ALL EXPOSED WOOD FRAMING TO BE CORE WOOD FREE OF BURRS, KNOTS, AND IMPERFECTIONS. MATCH VERT GRAIN PATTERS FOR LOWER AND UPPER SHELVES, AND HORIZ GRAIN BATTERS ACROSS SHELF BAYS

12 SOLID CORE WD UPPER STORAGE SWING DOOR AND LOCKSET

13 1/2" ARCHITECTURAL GRADE FINISH PLYWOOD

14 MIDDLE LEAF DOOR LOCK – LEVER EXTENSION FLUSH BOLT TO BOLT THROUGH HOLE IN TOP TRACK. MFR/MODEL, AND SIZE PER FIELD CONDITIONS.

GREG KORN AIA
ARCHITECTS

INTERIOR ALTERATION

2525 MOORPARK RD
THOUSAND OAKS, CA 91362

Client
Andrew Mooney, Park Planner
CONEJO RECREATION & PARK DISTRICT
403 W. Hillcrest Drive
Thousand Oaks CA 91360
(805) 495-6471
amooney@crpd.org

Architect
G. Ian Korn, AIA
GKA Architects
351 Rolling Oaks Dr Ste 202
Thousand Oaks, CA 91361
gkorn@gka-arc.com
(805) 370-1300

MEP Engineer
Arash Nazari, PE
A&N Design Group Inc
21550 Oxnard Street #300
Woodland Hills, CA 91367
818-288-4361
arash@an-dg.com

Plan Examiner
TBD
City of Thousand Oaks
Building Division
2100 E Thousand Oaks Blvd
Thousand Oaks, CA 91361
(805) 449-2100

No.	Description	Date
1	Schematic Design to Client	08.07.19
2	Schematic Design to Client- Storage	08.27.19
3	Building Dept Submittal	09.23.19
4	Building Dept Corrections	10.25.19
5	Public Works Corrections	11.07.19
6	CDs to Client-Storage	01.13.20
7	CDs to Client-Storage Rev	01.21.20

Project number	2019003
Date	01.21.20
Drawn by	GK
Checked by	GK

Drawing Name
STORAGE CLOSET PLANS

Drawing No.
A-111.00

NOTE: DO NOT SCALE DRAWINGS
Scale 1/8"=1'-0"

KEYNOTES

01 [N] PORCELAIN TILE WALL, TYP. COLOR PER OWNER

02 [N] FLOOR TO CEILING METAL STUD & GWB PARTITION WALL. STORAGE SIDE PAINTED SEMI GLOSS, COLOR PER OWNER

03 [N] CHILDREN'S SINK

04 [N] FLOOR TO CEILING METAL STUD & GWB WALL FURRING W/ INFILL BATT INSULATION

05 [N] CHILDREN'S TOILET

06 [E] CMU EXTERIOR WALL

07 [N] SOAP DISPENSER

08 [N] PAPER TOWEL HOLDER

09 [N] MIRROR

10 [N] GWB CEILING. PAINTED SEMI GLOSS COLOR PER OWNER

11 [N] PLYWOOD PLATFORM

12 [N] CERAMIC TILE FLOOR WITH INTEGRATED COVE BASE. COLOR PER OWNER

13 LINE OF UNDERSIDE OF [E] ROOF

14 LINE OF [E] EXTERIOR CMU WALL

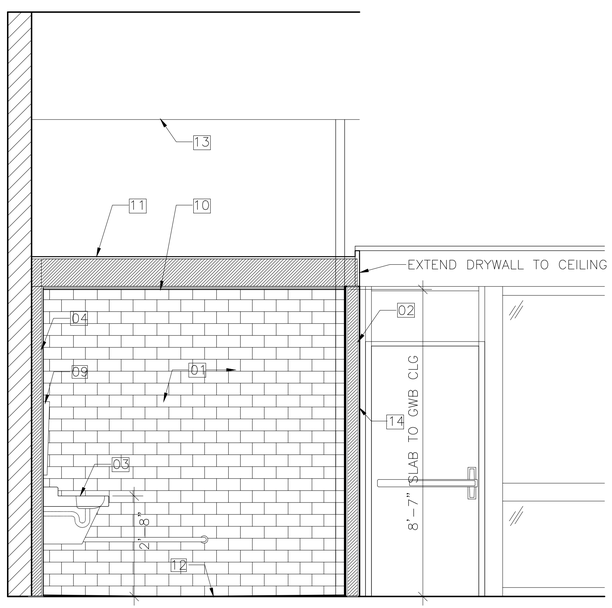

2 EAST INTR ELEVATION SCALE 1/2" = 1'-0"

NOTE: SEE A502 FOR ACCESSIBLE RESTROOM FACILITY FIXURE DIMENSIONAL MOUNTING REQUIREMENTS

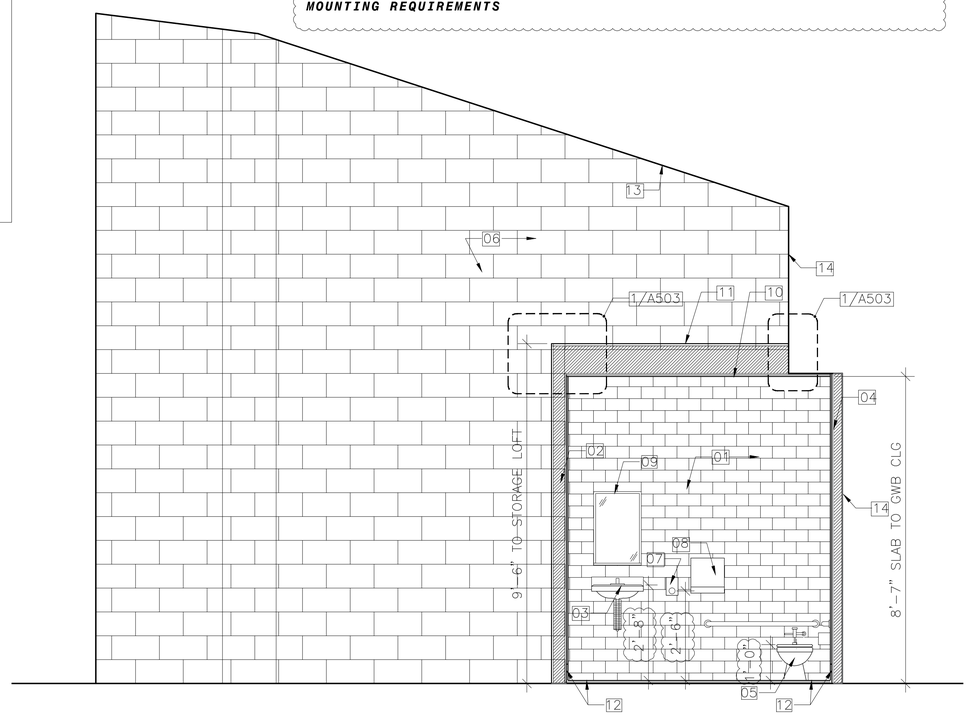

1 NORTH INTR ELEVATION SCALE 1/2" = 1'-0"

GREG KORN AIA ARCHITECTS

INTERIOR ALTERATION

2525 MOORPARK RD
THOUSAND OAKS, CA 91362

Client

Andrew Mooney, Park Planner
CONEJO RECREATION & PARK DISTRICT
403 W. Hillcrest Drive
Thousand Oaks CA 91360
(805) 495-6471
amooney@crpd.org

Architect

G. Ian Korn, AIA
GKA Architects
351 Rolling Oaks Dr Ste 202
Thousand Oaks, CA 91361
gkorn@gka-arc.com
(805) 370-1300

MEP Engineer

Arash Nazari, PE
A&N Design Group Inc
21550 Oxnard Street #300
Woodland Hills, CA 91367
818-288-4361
arash@an-dg.com

Plan Examiner

TBD
City of Thousand Oaks
Building Division
2100 E Thousand Oaks Blvd
Thousand Oaks, CA 91361
(805) 449-2100

No.	Description	Date
1	Schematic Design to Client	08.07.19
2	Schematic Design to Client- Storage	08.27.19
3	Building Dept Submittal	09.23.19
4	Building Dept Corrections	10.25.19
5	Public Works Corrections	11.07.19
6	CDs to Client-Storage	01.13.20
7	CDs to Client-Storage Rev	01.21.20

Project number	2019003
Date	01.21.20
Drawn by	GK
Checked by	GK

Drawing Name
RESTROOM INTERIOR ELEVS

Drawing No. 1
A-401.00

NOTE: DO NOT SCALE DRAWING
Scale AS NOTED

DEMOLITION KEYNOTES

D1 RELOC [E] RETURN REGISTER TO NEW LOCATION TO MAKE ROOM FOR [N] STORAGE LOCKERS

D2 [E] LIGHTING TO REMAIN

D3 [E] SUPPLY REGISTER TO REMAIN

D4 [E] STORAGE CLOSET TO BE DEMOLISHED

D5 [E] UPPER AND LOWER CABINETS TO BE DEMOLISHED

D6 [E] 1x6" CONCRETE STRIP TO BE CUT& GROUND FOR BOTTOM TRACK

HARDWARE SPECIFICATIONS

TT01
DESCR: TOP TRACK
MFR: JOHNSON
MDL: 200-0072
MATL; ALUM;
FINISH: MILL
SIZE: 72"

BT01
DESCR: BOTTOM TRACK
MFR: JOHNSON
MDL: 1050-0072
MATL; ALUM;
FINISH: MILL
SIZE: 72"

WH01
DESCR: WHEEL HANGER
MFR: JOHNSON
MDL: 2020
LOAD: 200 LBS

TS01
DESCR; TRACK STOP
MFR: JOHNSON
MDL: 100

DH01
DESCR: POCKET DOOR PULL AND MORTISE LOCK
MFR: EMKAY
MDL: 2113

BG01
DESCR: BOTTOM GUIDE
MFR: JOHNSON
MDL: 1705

NOTES: 1) BOTTOM TRACK TO BE SECURED TO CONCRETE WITH CONC ANCHORS PER MANUF. RECOMMENDATIONS 2) INFILL BETWEEN TRACKS WITH LW CONC PATCH TO MATCH [E]

NOTES

1 ALL FRAMING TO BE DOUGLAS FIR #2 GRADE A
2 PRIME AND PAINT ALL EXPOSED FINISHES. COLOR AND FINISH BY OWNER

FRAMING KEYNOTES

01 [E] BEAM ABOVE

02 2x6 LEDGER W/ HILTI CMU WALL ANCHORS SPACED 8" O.C. STAGGERED 3" ON LEDGER CENTERLINE.

03 3/4" PLYWOOD DECK O/ 2x6 SHELF JOISTS PER PLAN, W 2 1/2" DECK SCREWS SPACED 12" OC IN SHELF JOISTS

04 2x4 STUD FRAMING w 8d NAILS

05 1/2" PLYWOOD SHEATHING

06 SOLID BLOCKING AT MID HEIGHT OF WALL FRMG

07 ANCHOR BOLTS DRILLED AND EXPOXIED IN CONCRETE THROUGH BOTTOM PLATE @ 16" OC

FINISH, MILWORK & HARDWARE KEYNOTES

08 1x DOOR FRAME ATTACHED TO CLOSET FRAMING WITH FINISH NAILS

09 DOOR PULL AND MORTISE LOCK

10 PAINTED 1 1/2" x 36x80" SOLID CORE WD SLIDING DOOR

11 ALL EXPOSED WOOD FRAMING TO BE CORE WOOD FREE OF BURRS, KNOTS, AND IMPERFECTIONS. MATCH VERT GRAIN PATTERS FOR LOWER AND UPPER SHELVES, AND HORIZ GRAIN BATTERS ACROSS SHELF BAYS

12 SOLID CORE WD UPPER STORAGE SWING DOOR AND LOCKSET

13 1/2" ARCHITECTURAL GRADE FINISH PLYWOOD

14 MIDDLE LEAF DOOR LOCK - LEVER EXTENSION FLUSH BOLT TO BOLT THROUGH HOLE IN TOP TRACK. MFR/MODEL, AND SIZE PER FIELD CONDITIONS.

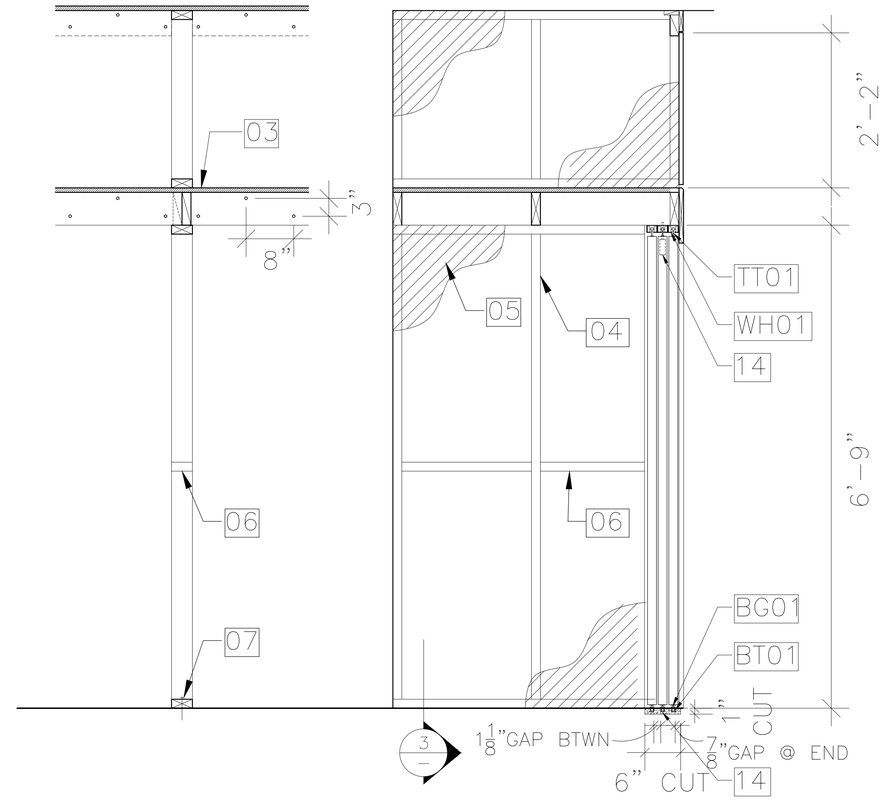

3 SECTION

2 SECTION SCALE 1" = 1'-0"

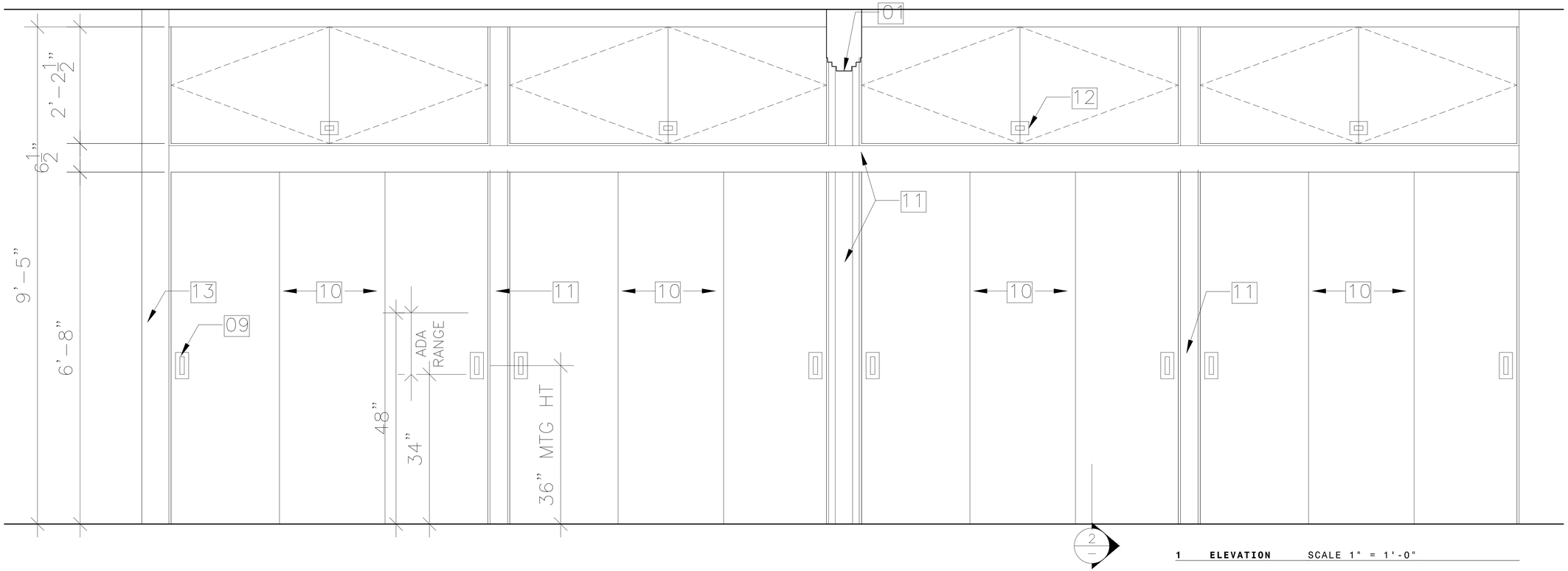

1 ELEVATION SCALE 1" = 1'-0"

GREG KORN AIA ARCHITECTS

INTERIOR ALTERATION

2525 MOORPARK RD
THOUSAND OAKS, CA 91362

Client
Andrew Mooney, Park Planner
CONEJO RECREATION & PARK DISTRICT
403 W. Hillcrest Drive
Thousand Oaks CA 91360
(805) 495-6471
amooney@crpd.org

Architect
G. Ian Korn, AIA
GKA Architects
351 Rolling Oaks Dr Ste 202
Thousand Oaks, CA 91361
gkorn@gka-arc.com
(805) 370-1300

MEP Engineer
Arash Nazari, PE
A&N Design Group Inc
21550 Oxnard Street #300
Woodland Hills, CA 91367
818-288-4361
arash@an-dg.com

Plan Examiner
TBD
City of Thousand Oaks
Building Division
2100 E Thousand Oaks Blvd
Thousand Oaks, CA 91361
(805) 449-2100

No.	Description	Date
1	Schematic Design to Client	08.07.19
2	Schematic Design to Client- Storage	08.27.19
3	Building Dept Submittal	09.23.19
4	Building Dept Corrections	10.25.19
5	Public Works Corrections	11.07.19
6	CDs to Client-Storage	01.13.20
7	CDs to Client-Storage Rev	01.21.20

Project number	2019003
Date	01.21.20
Drawn by	GK
Checked by	GK

Drawing Name
RESTROOM INTERIOR ELEVS

Drawing No.
A-411.00

NOTE: DO NOT SCALE DRAWING
Scale AS NOTED

GENERAL NOTES:

1. WHERE A SINGLE DISABLED PARKING STALL IS PROVIDED, THE LOADING AND UNLOADING AREA SHALL BE LOCATED ON THE PASSENGER SIDE OF THE VEHICLE.

2. SURFACE SLOPES OF ACCESSIBLE PARKING SPACES SHALL BE THE MINIMUM POSSIBLE AND SHALL NOT EXCEED 1/4" PER FOOT IN ANY DIRECTION.

KEYNOTES

A. AUTOMOBILE.

B. LOADING AND UNLOADING AREA.

C. "RESERVED" SIGN: SEE DETAIL

V. VAN ACCESSIBLE

HDCP17A
03-17-04

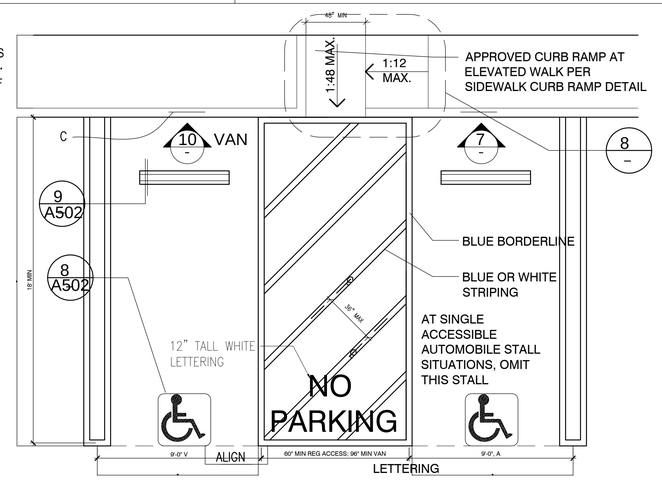

ACCESSIBLE PARKING STALLS (AUTOMOBILES) — SCALE 1/4"=1'-0" — 9

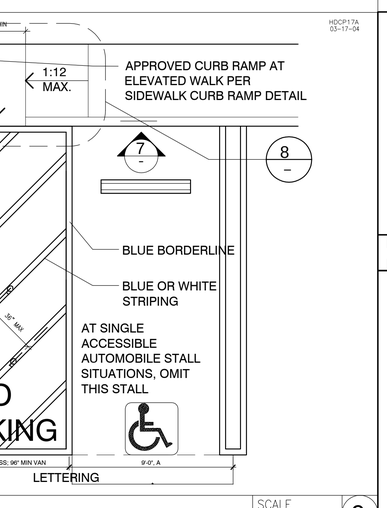

PATH OF TRAVEL PROTRUDING OBJECT LIMITS DETAIL — SCALE — 6

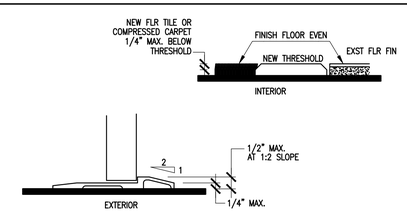

ACCESSIBLE THRESHOLD & DOOR SILL REQUIREMENTS — SCALE — 3

ALL CURB RAMPS SHALL HAVE A GROOVED BORDER 12 INCHES WIDE AT THE LEVEL SURFACE OF THE SIDEWALK ALONG THE TOP AND EACH SIDE APPROXIMATELY 3/4 INCH ON CENTER.

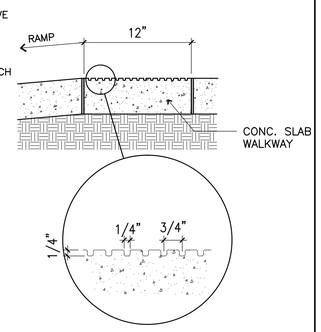

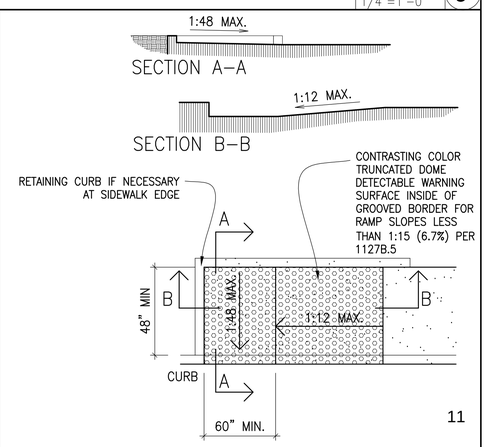

MAXIMUM SLOPES OF ADJOINING GUTTERS, ROAD SURFACE IMMEDIATELY ADJACENT TO THE CURB RAMP, OR ACCESSIBLE ROUTE, SHALL NOT EXCEED 1/4":12" WITHIN 4 FT. OF THE TOP AND THE BOTTOM OF THE CURB RAMP.

GROOVED BORDER DETAIL — SCALE — 11

CURB–CUT RAMP DETAIL AT SIDEWALK LESS THAN 60" IN WIDTH — SCALE 1/4"=1'-0" — 8

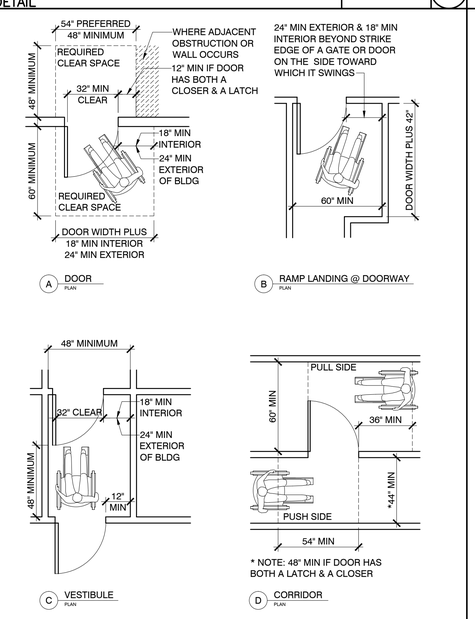

NOTES:

1. CLEAR SPACES MUST BE LEVEL TO PREVENT WHEELCHAIRS FROM ROLLING WHEN THE OCCUPANT RELEASES THE WHEEL GRIPS TO REACH FOR THE DOOR. 1/4" PER FOOT IS ALLOWED FOR DRAINAGE.

2. WHERE DOORS OPEN ONTO, BUT NOT INTO A CORRIDOR, THE REQUIRED LEVEL AREA BEYOND THE DOORS MAY BE A MINIMUM OF 48". FOR ADDITIONAL INFORMATION, REFER TO APPLICABLE NOTES ON TYPICAL ACCESSIBILITY NOTES SHEET.

CLEARANCE REQUIREMENTS — SCALE 1/4"=1'-0" — 5

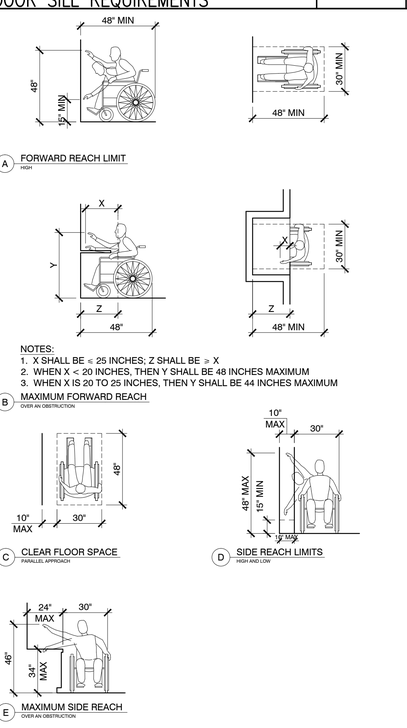

REACH RANGES — SCALE 1/4"=1'-0" — 2

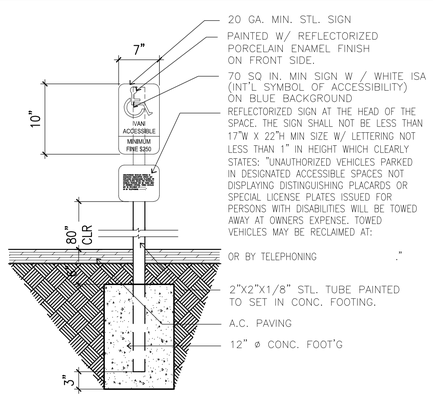

NOTE: SIGN MAY BE WALL MOUNTED

ACCESSIBLE VAN PARKING STALL SIGN — SCALE — 10

NOTE: SIGN MAY BE WALL MOUNTED

ACCESSIBLE PARKING STALL SIGN — SCALE — 7

REQUIREMENTS

1. ZERO CURBS REQUIRE DETECTALE WARNIGNS IF PEDESTRIAN ACCESSIBLE ROUTE CROSSES OR ADJOINS VEHICULAR TRAFFIC FOR THE FULL WIDTH, AND 36" DEEP PER CBC.

2. DETECTABLE WARNING SHAPE: TRUNCATED DOME PATTERN WITH SQUARE GRID (IN–LINE)

3. TRUNCATED DOME SPACING: BASE IS 0.65' BETWEEN CLOSEST DOMES, WITH A CENTER TO CENTER SPACING OF A NOMINAL 2.35' PER CBC.

4. TRUNCATED DOME SIZE: DIAMETER AT BASE IS 0.9' WITH HEIGHT OF 0.2" AND TAPERS TO 0.45" FOR TOP DIAMETER PER CBC.

5. DETECTABLE WARNING SURFACE WITH TRUNCATED DOMES TO CONTRAST VISUALLY WITH ADJACENT WALKING SURFACE EITHER LIGHT ON DARK OR DARK ON LIGHT WITH COLOR AS AN INTEGRAL PART WITH A CONTRAST OF 70% PER CA DOT DIB 82–04.

6. DETECTABLE WARNINGS ARE SLIP RESISTANT

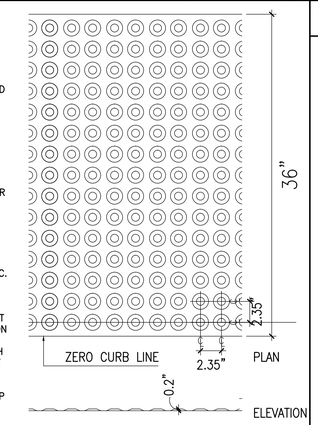

DETECTABLE WARNING DETAIL — SCALE — 4

ACCESSIBLE SYMBOLS AND EXIT SIGNAGE — SCALE — 1

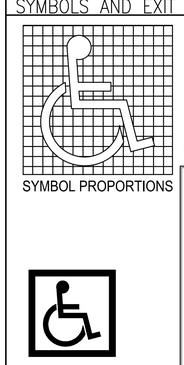

SYMBOL PROPORTIONS

ENTRANCE SIGNAGE

DISPLAY CONDITION 2

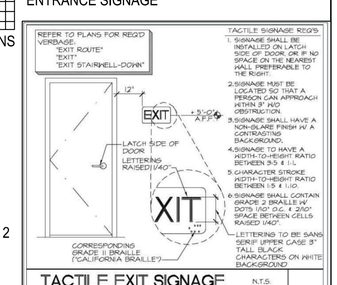

TACTILE EXIT SIGNAGE — N.T.S.

GREG KORN AIA ARCHITECTS

INTERIOR ALTERATION

2525 MOORPARK RD
THOUSAND OAKS, CA 91362

Client

Andrew Mooney, Park Planner
CONEJO RECREATION & PARK DISTRICT
403 W. Hillcrest Drive
Thousand Oaks CA 91360
(805) 495-6471
amooney@crpd.org

Architect

G. Ian Korn, AIA
GKA Architects
351 Rolling Oaks Dr Ste 202
Thousand Oaks, CA 91361
gkorn@gka-arc.com
(805) 370-1300

MEP Engineer

Arash Nazari, PE
A&N Design Group Inc
21550 Oxnard Street #300
Woodland Hills, CA 91367
818-288-4361
arash@an-dg.com

Plan Examiner

TBD
City of Thousand Oaks
Building Division
2100 E Thousand Oaks Blvd
Thousand Oaks, CA 91361
(805) 449-2100

No.	Description	Date
1	Schematic Design to Client	08.07.19
2	Schematic Design to Client- Storage	08.27.19
3	Building Dept Submittal	09.23.19
4	Building Dept Corrections	10.25.19
5	Public Works Corrections	11.07.19
6	CDs to Client-Storage	01.13.20
7	CDs to Client-Storage Rev	01.21.20

Project number	2019003
Date	01.21.20
Drawn by	GK
Checked by	GK

Drawing Name
ACCESSIBILITY DETAILS

Drawing No.
A-501.00

NOTE: DO NOT SCALE DRAWING
Scale AS NOTED

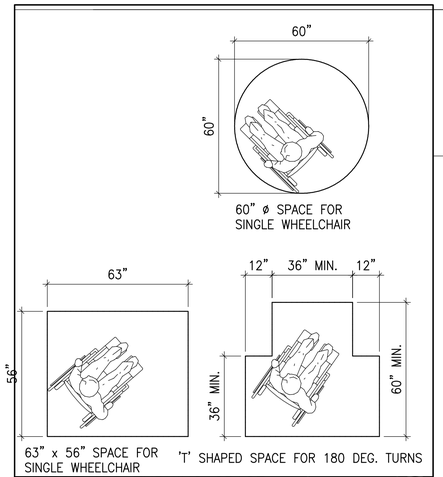

WHEELCHAIR TURNING SPACE REQUIREMENTS | SCALE | 8

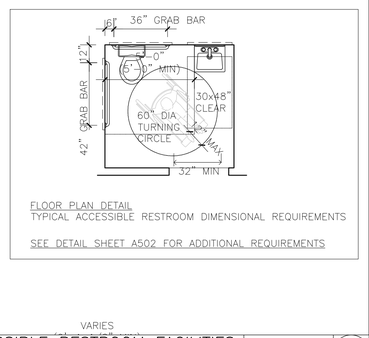

FLOOR PLAN DETAIL
TYPICAL ACCESSIBLE RESTROOM DIMENSIONAL REQUIREMENTS

SEE DETAIL SHEET A502 FOR ADDITIONAL REQUIREMENTS

ACCESSIBLE RESTROOM FACILITIES OVERALL DIMENSIONAL REQTS | 1/4"=1'-0" | 9

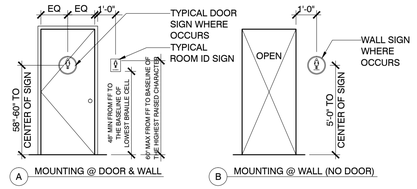

A MOUNTING @ DOOR & WALL

B MOUNTING @ WALL (NO DOOR)

NOTES:

1. DOOR SIGN: SHALL BE CENTERED ON DOOR & MOUNTED 60" ABOVE THE FLOOR (W/ADHESIVE ONLY - CAULK EDGES W/CLEAR SILICONE) @ THE CENTER OF THE SIGN.
2. ROOM SIGN: RAISED & BRAILLED CHARACTERS & PICTORIAL SYMBOL SIGNS (PICTOGRAMS). LETTERS & NUMERALS SHALL BE RAISED 1/32", UPPERCASE, SANS SERIF OR SIMPLE SERIF TYPE, & SHALL BE ACCOMPANIED WITH GRADE 2 BRAILLE. RAISED CHARACTERS SHALL BE 5/8" HIGH MIN, 2" HIGH MAX.
3. FINISH CONTRAST: THE CHARACTERS & BACKGROUND OF SIGNS SHALL BE EGGSHELL, MATTE, OR OTHER NON-GLARE FINISH.
4. CHARACTERS & SIGNS: SHALL BE INSTALLED ON THE WALL ADJACENT TO THE LATCH SIDE OF THE DOOR.

SIGNAGE MOUNTING REQUIREMENTS | SCALE 1/4"=1'-0" | 6

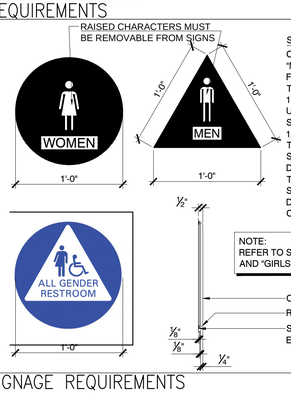

SYMBOL DESCRIPTION

ON DOORWAYS LEADING TO "MEN"/"BOYS" SANITARY FACILITIES AN EQUILATERIAL TRIANGLE 1/4" THICK W/EDGE 12" LONG & A VERTEX POINTING UPWARD & ON "WOMEN"/"GIRLS" SANITARY FACILITES A CIRCLE 1/4" THICK & 12" IN DIAMETER. THESE GEOMETRIC SYMBOLS SHALL BE CENTERED ON THE DOOR @ A HEIGHT OF 60" & THEIR COLOR & CONTRAST SHALL BE DISTINCTLY DIFFERENT FROM THE COLOR & CONTRAST OF THE DOOR.

NOTE:
REFER TO SCHEDULE FOR "BOYS" AND "GIRLS" SIGNAGE LOCATIONS.

SIGNAGE REQUIREMENTS | SCALE 1 1/2"=1'-0" | 5

TOILET ACCESSORIES (TA)

- TA 1 SOAP DISPENSER
- TA 2 RECESSED TOILET SEAT COVER DISPENSER & ROLL TOILET TISSUE DISPENSER
- TA 2A PARTITION MOUNTED T/2 FOR HC (ONE SIDE FLUSH)
- TA 2B T/2 MOUNTED ON TOILET PARTITION
- TA 2C T/2 SURFACE MOUNTED ABOVE
- TA 3 RECESSED TOILET SEAT COVER DISPENSER, NAPKIN DISPOSAL & TOILET TISSUE DISPENSER
- TA 3A PARTITION MOUNTED (ONE SIDE FLUSH) T/3 FOR USE IN H/C COMPARTMENT
- TA 3B T/3 MOUNTED ON TOILET PARTITION
- TA 3C SURFACE MOUNTED T/3
- TA 3D SURFACE MOUNTED MULTI-ROLL TOILET TISSUE DISPENSER
- TA 4 RECESSED PAPER TOWEL DISPENSER & (12 GAL) WASTE RECEPTACLE
- TA 4A RECESSED WASTE RECEPTACLE
- TA 4B FULLY OR PARTIALLY RECESSED PAPER TOWEL DISPENSER & (12 GAL) WASTE RECEPTACLE
- TA 4C FULLY RECESSED WASTE RECEPTACLE
- TA 4D FULLY RECESSED PAPER TOWEL DISPENSER & WASTE RECEPTACLE
- TA 5 RECESSED PAPER TOWEL DISPENSER
- TA 5A SURFACE MOUNTED PAPER TOWEL DISPENSER & (12 GAL) WASTE RECEPTACLE
- TA 6 NOT USED
- TA 6A NOT USED
- TA 7 RECESSED SOAP DISPENSER
- TA 7A SURFACE MOUNTED T/7 ABOVE
- TA 8 GRAB BAR MOUNTING
- TA 9 TOILET GRAB BAR
- TA 10 MIRROR WITH 5" DEEP SHELF
- TA 11 NOT USED
- TA 12 SURFACE MOUNTED TOILET SEAT COVER DISPENSER
- TA 13 SANITARY NAPKIN DISPOSAL
- TA 14 SURFACE MOUNTED PAPER TOWEL DISPENSER
- TA 15 SURFACE MTD (20 GAL) WASTE RECEPTACLE
- TA 16 RECESSED TOILET TISSUE DISPENSER (-)
- TA 17 SURFACE MOUNTED TOILET TISSUE DISPENSER SHALL NOT BE OF A TYPE THAT CONTROLS DELIVERY OR THAT DOES NOT ALLOW CONTINOUS PAPER FLOW (11B-604.9.6)
- TA 19 ELECTRIC HAND DRYER
- TA 20 NOT USED
- TA 21 NOT USED
- TA 22 NOT USED

TOILET FIXTURES (TF)

- TF 1 STANDARD CEILING HUNG TOILET PARTITION
- TF 1A HEAVY DUTY CEILING HUNG TOILET PARTITION
- TF 2 WALL HUNG URINAL DIVIDER - MAX DEPTH 24"
- TF 3 WALL HUNG WATER CLOSET
- TF 3S WALL HUNG WATER CLOSET, STAINLESS STEEL
- TF 4 WALL HUNG URINAL
- TF 4S WALL HUNG URINAL, STAINLESS STEEL
- TF 5 WALL HUNG LAVATORY
- TF 6 WALL HUNG LAVATORY, STAINLESS STEEL
- TF 7 COUNTER TOP LAVATORY
- TF 8 WALL HUNG LAVATORY W/STAINLESS STEEL SHELF
- TF 9 CHILDREN'S TOILET, 12 IN SEAT HEIGHT. SEE PLMB SPEC
- TF 10 NOT USED
- TF 11 NOT USED

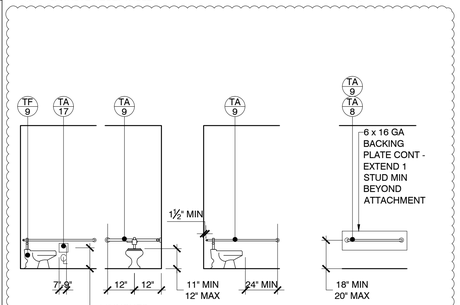

ACCESSIBLE TOILET *SPECIAL REQUIREMENTS PER CBC 11B-604.9, AGES 3-4*

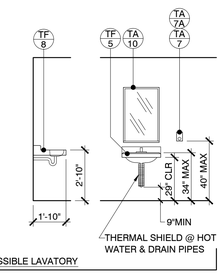

ACCESSIBLE LAVATORY

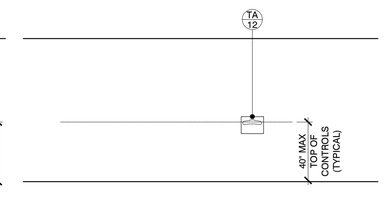

ACCESSIBLE ACCESSORIES

ACCESSIBLE RESTROOM FACILITIES FIXTURE REQUIREMENTS | SCALE 1/4"=1'-0" | 3

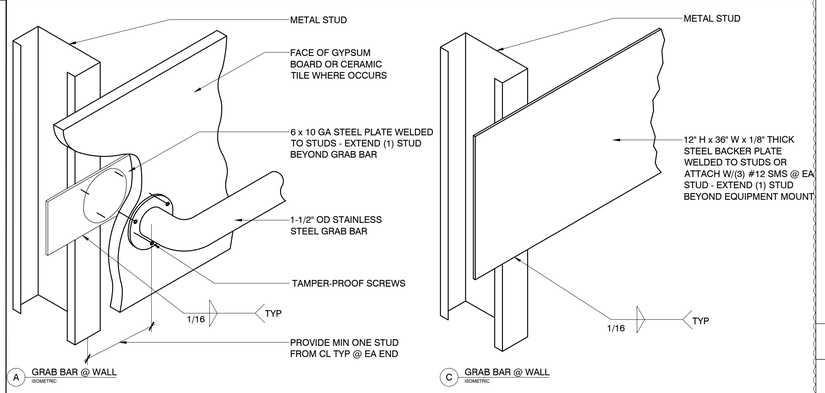

A GRAB BAR @ WALL
ISOMETRIC

C GRAB BAR @ WALL
ISOMETRIC

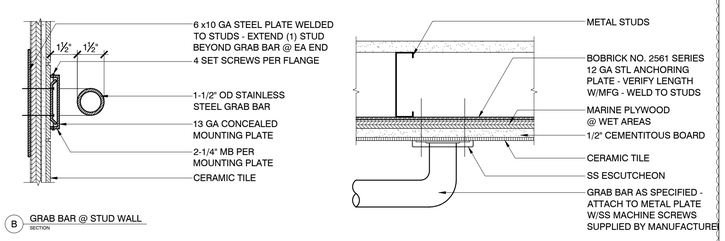

B GRAB BAR @ STUD WALL
SECTION

GRAB BAR ATTACHMENT DETAILS | SCALE 3"=1'-0" | 4

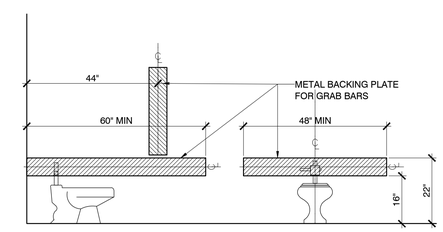

GRAB BAR MOUNTING PLATES | SCALE 1/2"=1'-0" | 2

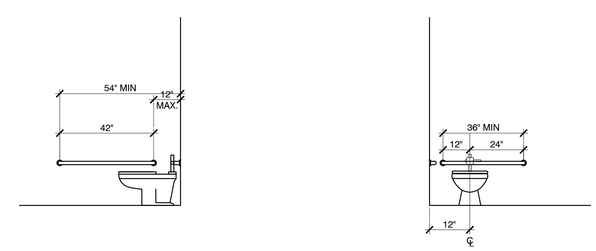

GRAB BAR LOCATIONS | SCALE 1/4"=1'-0" | 1

GREG KORN AIA ARCHITECTS

INTERIOR ALTERATION

2525 MOORPARK RD
THOUSAND OAKS, CA 91362

Client

Andrew Mooney, Park Planner
CONEJO RECREATION & PARK DISTRICT
403 W. Hillcrest Drive
Thousand Oaks CA 91360
(805) 495-6471
amooney@crpd.org

Architect

G. Ian Korn, AIA
GKA Architects
351 Rolling Oaks Dr Ste 202
Thousand Oaks, CA 91361
gkorn@gka-arc.com
(805) 370-1300

MEP Engineer

Arash Nazari, PE
A&N Design Group Inc
21550 Oxnard Street #300
Woodland Hills, CA 91367
818-288-4361
arash@an-dg.com

Plan Examiner

TBD
City of Thousand Oaks
Building Division
2100 E Thousand Oaks Blvd
Thousand Oaks, CA 91361
(805) 449-2100

No.	Description	Date
1	Schematic Design to Client	08.07.19
2	Schematic Design to Client- Storage	08.27.19
3	Building Dept Submittal	09.23.19
4	Building Dept Corrections	10.25.19
5	Public Works Corrections	11.07.19
6	CDs to Client- Storage	01.13.20
7	CDs to Client- Storage Rev	01.21.20

Project number	2019003
Date	01.21.20
Drawn by	GK
Checked by	GK

Drawing Name
ACCESSIBILITY DETAILS

Drawing No. 1
A-502.00

NOTE: DO NOT SCALE DRAWING
Scale AS NOTED

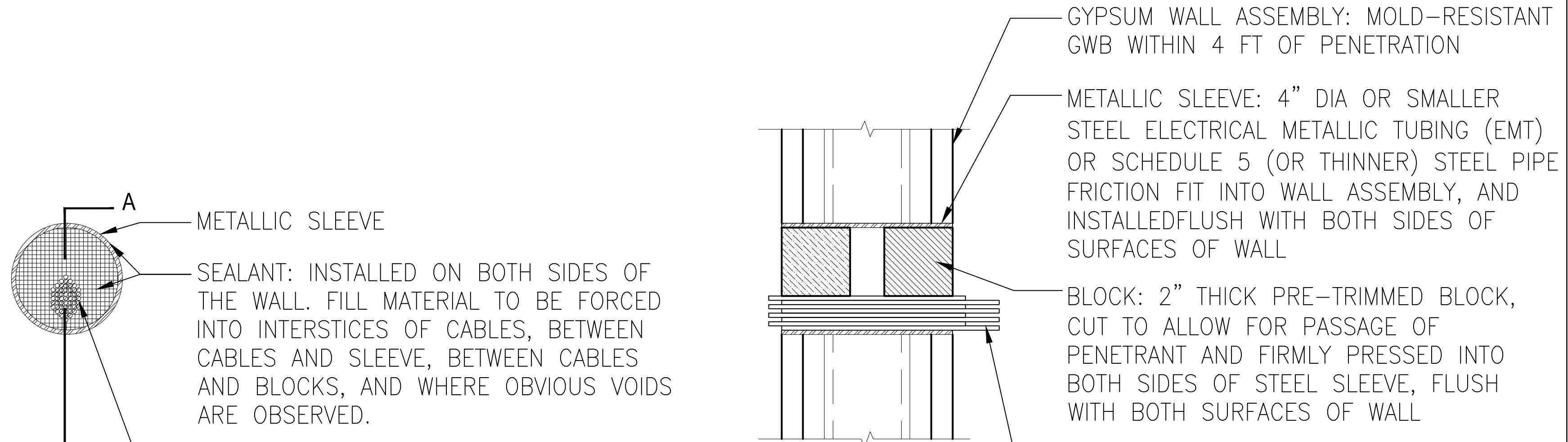

SECTION A–A

CABLES: AGGREGATE CROSS SECTIONAL AREA OF CABLES IN OPENING TO BE MAX 28% OF THE CROSS SECTIONAL AREA OF THE OPENING. CABLES TO BE RIGIDLY SUPPORTED ON BOTH SIDES OF THE WALL ASSEMBLY. ANY COMBINATION OF THE FOLLOWING TYPES AND SIZES OF COPPER CONDUCTOR CABLES MAY BE USED:

A. MAX 7/C–NO.12 AWG W/POLYVINYL CHRLORIDE (PVC) INSULATION AND JACKET.
B. MAX 25 PAIR NO 24 AWG TELEPHONE CABLE WITH PVC INSULATION AND JACKET.
C. TYPE RG 59/U COAXIAL CABLE WITH POLYETHYLENE (PE) INSULATION AND PVC JACKET.
D. MULTIPLE FIBER OPTICAL COMMUNICATION CABLE JACKETED WITH PVC AND HAVING A MAX OD OF ⅝".

FIRESTOPPING NOTES
1. FIRESTOPPING SHALL BE FS–ONE MANUFACTURED BY HILTI, UON.
2. FIRESTOPPING REQUIRES SPECIAL INSPECTION. REVIEW ALL FIRESTOPPING DETAILS WITH SPECIAL INSPECTION AGENCY PRIOR TO INSTALLATION.

ELECTRICAL CONDUIT THROUGH 2 HR WALL–SECTIONS

SCALE 3"=1'–0" 9

NOTES
1. MAXIMUM DIAMETER OF OPENING 32–1/4" FOR STEEL STUD WALLS.
2. ANNULAR SPACE – MIN 0", MAX 2–1/4"
3. PIPE MAY BE INSTALLED WITH CONTINUOUS POINT OF CONTACT.
4. PIPE MAY NOT BE INSTALLED AT ANGLE GREATER THAN 45° FROM PERPENDICULAR

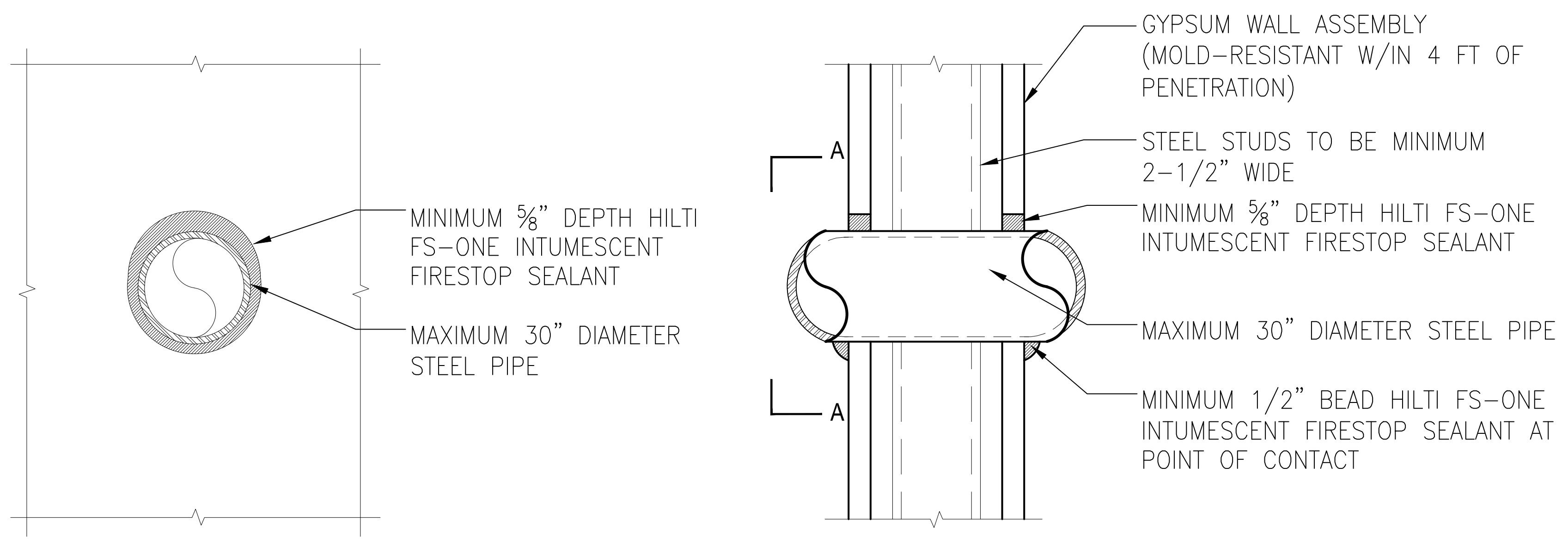

SECTION A–A

UL/cUL SYSTEM NO W–L–1054

USE UL/cUL SYSTEM NO W–L–1154 FOR 3 HOUR PARTITION. REQUIRES SHEDULE 40 MTL PIPE SLEEVE

METAL PIPE THROUGH 2 HR WALL – SECTIONS

SCALE 3"=1'–0" 5

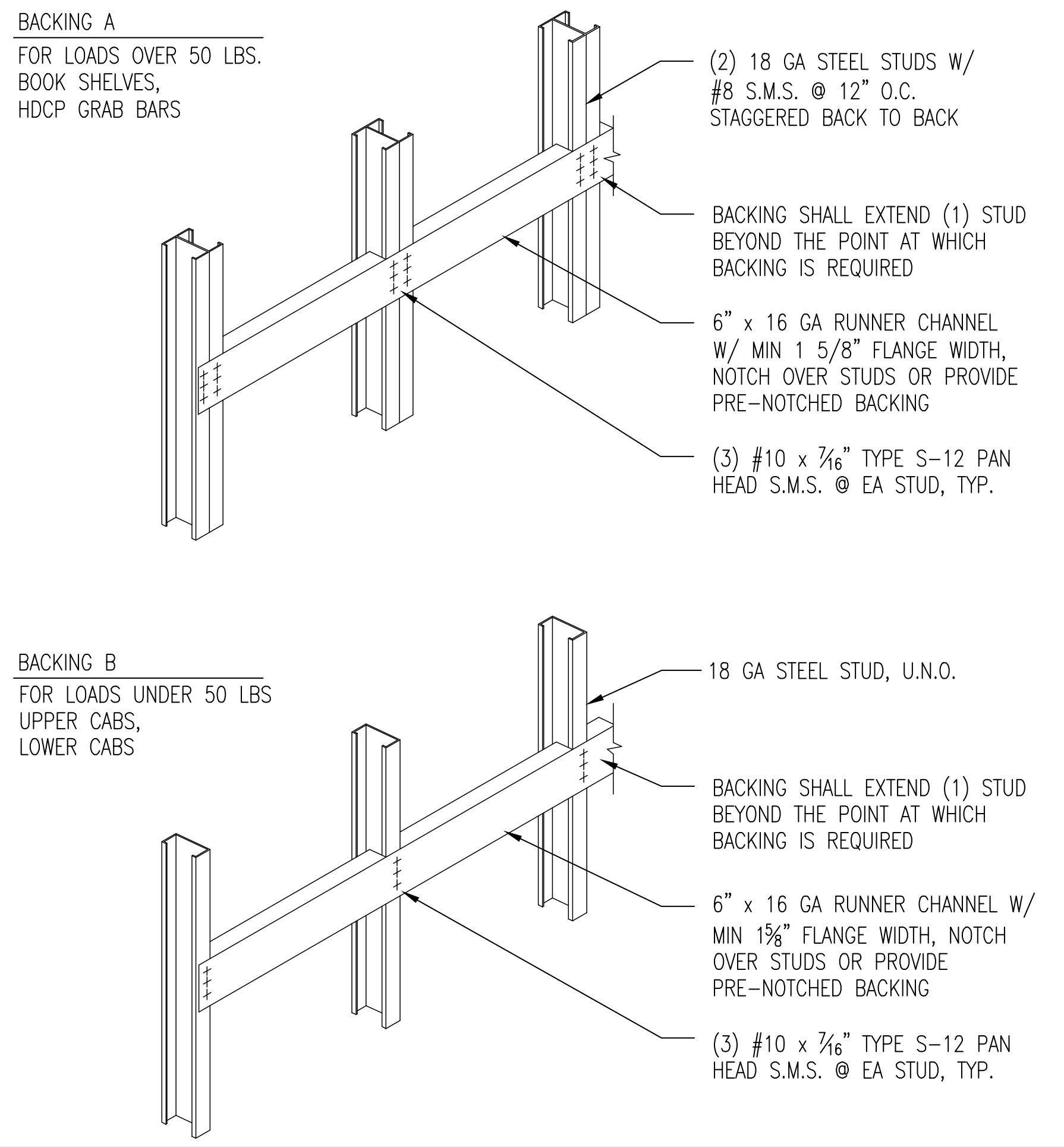

METAL STUD WALL BACKING

SCALE 3/4" = 1'–0" 2

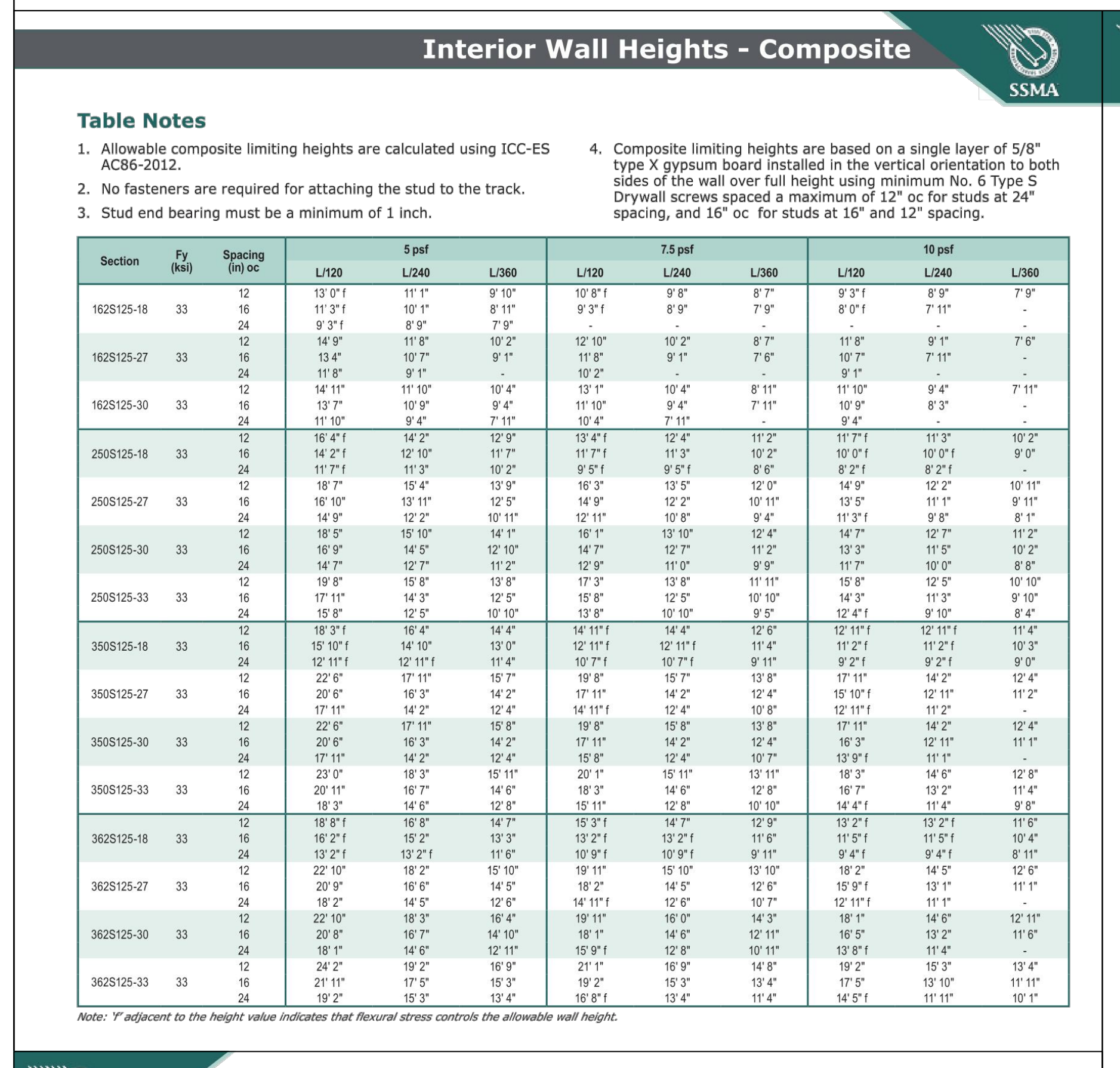

Interior Wall Heights - Composite

SSMA

Table Notes

1. Allowable composite limiting heights are calculated using ICC-ES AC86-2012.
2. No fasteners are required for attaching the stud to the track.
3. Stud end bearing must be a minimum of 1 inch.
4. Composite limiting heights are based on a single layer of 5/8" type X gypsum board installed in the vertical orientation to both sides of the wall over full height using minimum No. 6 Type S Drywall screws spaced a maximum of 12" oc for studs at 24" spacing, and 16" oc for studs at 16" and 12" spacing.

Section	Fy (ksi)	Spacing (in) oc	5 psf			7.5 psf			10 psf		
			L/120	L/240	L/360	L/120	L/240	L/360	L/120	L/240	L/360
162S125-18	33	12	13' 0" f	11' 1"	9' 10"	10' 8" f	9' 8"	8' 7"	9' 3" f	8' 9"	7' 9"
		16	11' 3" f	10' 1"	8' 11"	9' 3" f	8' 9"	7' 9"	8' 0" f	7' 11"	-
		24	9' 3" f	8' 9"	7' 9"	-	-	-	-	-	-
162S125-27	33	12	14' 9"	11' 8"	10' 2"	12' 10"	10' 2"	8' 7"	11' 8"	9' 1"	7' 6"
		16	13 4"	10' 7"	9' 1"	11' 8"	9' 1"	7' 6"	10' 7"	7' 11"	-
		24	11' 8"	9' 1"	-	10' 2"	-	-	9' 1"	-	-
162S125-30	33	12	14' 11"	11' 10"	10' 4"	13' 1"	10' 4"	8' 11"	11' 10"	9' 4"	7' 11"
		16	13' 7"	10' 9"	9' 4"	11' 10"	9' 4"	7' 11"	10' 9"	8' 3"	-
		24	11' 10"	9' 4"	7' 11"	10' 4"	7' 11"	-	9' 4"	-	-
250S125-18	33	12	16' 4" f	14' 2"	12' 9"	13' 4" f	12' 4"	11' 2"	11' 7" f	11' 3"	10' 2"
		16	14' 2" f	12' 10"	11' 7"	11' 7" f	11' 3"	10' 2"	10' 0" f	10' 0" f	9' 0"
		24	11' 7" f	11' 3"	10' 2"	9' 5" f	9' 5" f	8' 6"	8' 2" f	8' 2" f	-
250S125-27	33	12	18' 7"	15' 4"	13' 9"	16' 3"	13' 5"	12' 0"	14' 9"	12' 2"	10' 11"
		16	16' 10"	13' 11"	12' 5"	14' 9"	12' 2"	10' 11"	13' 5"	11' 1"	9' 11"
		24	14' 9"	12' 2"	10' 11"	12' 11"	10' 8"	9' 4"	11' 3" f	9' 8"	8' 1"
250S125-30	33	12	18' 5"	15' 10"	14' 1"	16' 1"	13' 10"	12' 4"	14' 7"	12' 7"	11' 2"
		16	16' 9"	14' 5"	12' 10"	14' 7"	12' 7"	11' 2"	13' 3"	11' 5"	10' 2"
		24	14' 7"	12' 7"	11' 2"	12' 9"	11' 0"	9' 9"	11' 7"	10' 0"	8' 8"
250S125-33	33	12	19' 8"	15' 8"	13' 8"	17' 3"	13' 8"	11' 11"	15' 8"	12' 5"	10' 10"
		16	17' 11"	14' 3"	12' 5"	15' 8"	12' 5"	10' 10"	14' 3"	11' 3"	9' 10"
		24	15' 8"	12' 5"	10' 10"	13' 8"	10' 10"	9' 5"	12' 4" f	9' 10"	8' 4"
350S125-18	33	12	18' 3" f	16' 4"	14' 4"	14' 11" f	14' 4"	12' 6"	12' 11" f	12' 11" f	11' 4"
		16	15' 10" f	14' 10"	13' 0"	12' 11" f	12' 11" f	11' 4"	11' 2" f	11' 2" f	10' 3"
		24	12' 11" f	12' 11" f	11' 4"	10' 7" f	10' 7" f	9' 11"	9' 2" f	9' 2" f	9' 0"
350S125-27	33	12	22' 6"	17' 11"	15' 7"	19' 8"	15' 7"	13' 8"	17' 11"	14' 2"	12' 4"
		16	20' 6"	16' 3"	14' 2"	17' 11"	14' 2"	12' 4"	15' 10" f	12' 11"	11' 2"
		24	17' 11"	14' 2"	12' 4"	14' 11" f	12' 4"	10' 8"	12' 11" f	11' 2"	-
350S125-30	33	12	22' 6"	17' 11"	15' 8"	19' 8"	15' 8"	13' 8"	17' 11"	14' 2"	12' 4"
		16	20' 6"	16' 3"	14' 2"	17' 11"	14' 2"	12' 4"	16' 3"	12' 11"	11' 1"
		24	17' 11"	14' 2"	12' 4"	15' 8"	12' 4"	10' 7"	13' 9" f	11' 1"	-
350S125-33	33	12	23' 0"	18' 3"	15' 11"	20' 1"	15' 11"	13' 11"	18' 3"	14' 6"	12' 8"
		16	20' 11"	16' 7"	14' 6"	18' 3"	14' 6"	12' 8"	16' 7"	13' 2"	11' 4"
		24	18' 3"	14' 6"	12' 8"	15' 11"	12' 8"	10' 10"	14' 4" f	11' 4"	9' 8"
362S125-18	33	12	18' 8" f	16' 8"	14' 7"	15' 3" f	14' 7"	12' 9"	13' 2" f	13' 2" f	11' 6"
		16	16' 2" f	15' 2"	13' 3"	13' 2" f	13' 2" f	11' 6"	11' 5" f	11' 5" f	10' 4"
		24	13' 2" f	13' 2" f	11' 6"	10' 9" f	10' 9" f	9' 11"	9' 4" f	9' 4" f	8' 11"
362S125-27	33	12	22' 10"	18' 2"	15' 10"	19' 11"	15' 10"	13' 10"	18' 2"	14' 5"	12' 6"
		16	20' 9"	16' 6"	14' 5"	18' 2"	14' 5"	12' 6"	15' 9" f	13' 1"	11' 1"
		24	18' 2"	14' 5"	12' 6"	14' 11" f	12' 6"	10' 7"	12' 11" f	11' 1"	-
362S125-30	33	12	22' 10"	18' 3"	16' 4"	19' 11"	16' 0"	14' 3"	18' 1"	14' 6"	12' 11"
		16	20' 8"	16' 7"	14' 10"	18' 1"	14' 6"	12' 11"	16' 5"	13' 2"	11' 6"
		24	18' 1"	14' 6"	12' 11"	15' 9" f	12' 8"	10' 11"	13' 8" f	11' 4"	-
362S125-33	33	12	24' 2"	19' 2"	16' 9"	21' 1"	16' 9"	14' 8"	19' 2"	15' 3"	13' 4"
		16	21' 11"	17' 5"	15' 3"	19' 2"	15' 3"	13' 4"	17' 5"	13' 10"	11' 11"
		24	19' 2"	15' 3"	13' 4"	16' 8" f	13' 4"	11' 4"	14' 5" f	11' 11"	10' 1"

Note: 'f' adjacent to the height value indicates that flexural stress controls the allowable wall height.

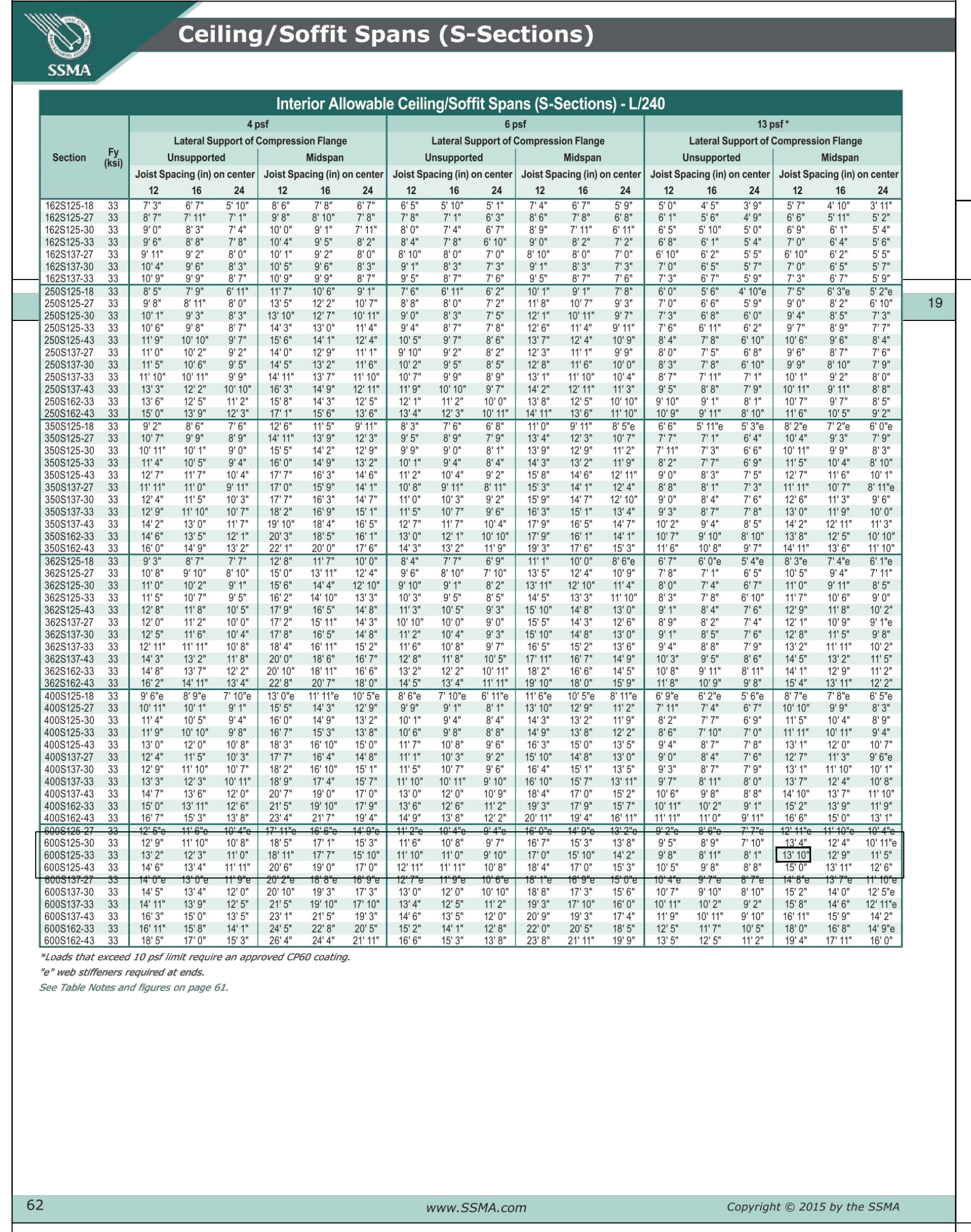

Ceiling/Soffit Spans (S-Sections)

SSMA

Interior Allowable Ceiling/Soffit Spans (S-Sections) - L/240

62 www.SSMA.com Copyright © 2015 by the SSMA

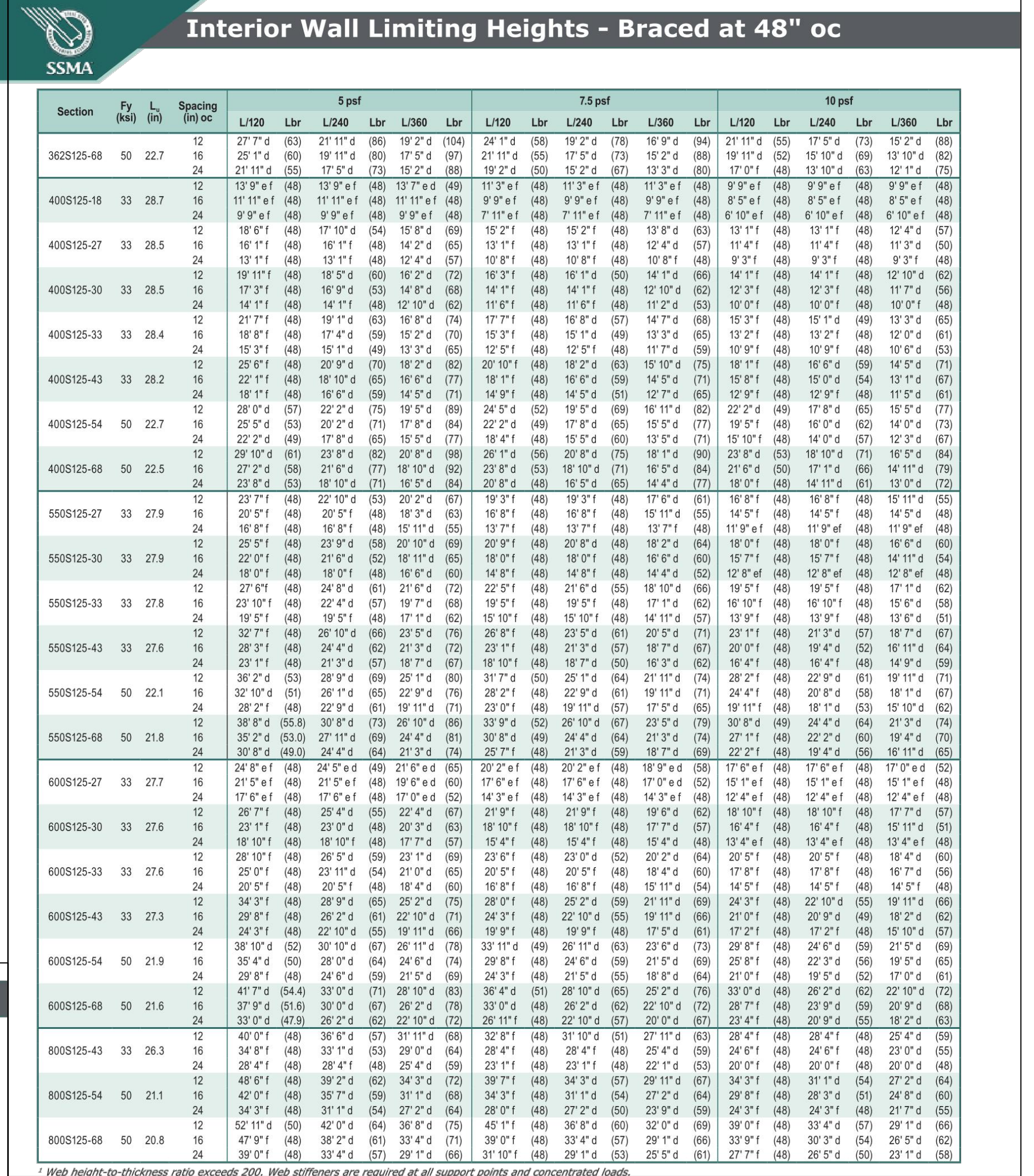

Interior Wall Limiting Heights - Braced at 48" oc

SSMA

19

STEEL STUD PROPERTIES REFERENCED FROM STEEL STUD MFR ASSOC'N TABLE 2015 REFR. AISI S100 FOR INTERIOR WALLS BRACED 48" O.C.

METAL STUD WALL PROPERTIES

SCALE NONE 8

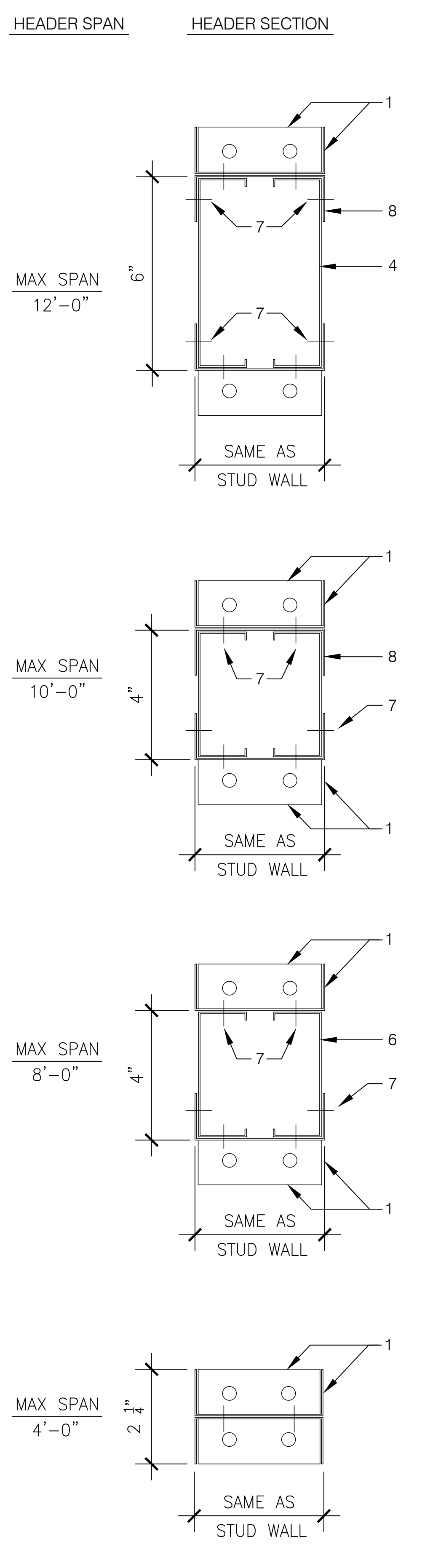

KEYNOTES

1. 18 GA RUNNER W/ 1 1/8" FLANGE DEPTH, RETURN FACE OF RUNNER AT JAMB STUD AND SECURE W/ (2) #7 x 7/16" TYPE S–12 PAN HEAD S.M.S. TYP EA. END
2. (2) 18 GA NESTED JAMB STUDS
3. ADDITIONAL JAMB STUD SECURED TO NESTED JAMB STUDS THROUGH FACE W/ #7 x 7⁄16" TYPE S–12 PAN HEAD S.M.S. @ 12" O.C.
4. 6" x 18 GA STUDS, NOTCH OVER JAMB STUDS
5. #7 x 7⁄16" TYPE S–12 PAN HEAD S.M.S. EACH SIDE OF JAMB STUDS, NUMBER AS SHOWN
6. 4" x 18 GA STUDS, NOTCH OVER JAMB STUDS
7. ATTACH RUNNER TO STUD W/ #7 x 7⁄16" TYPE S–12 PAN HEAD S.M.S. AT 18" O.C., MAX 6" FROM ENDS, TYP
8. 18 GA. RUNNER WITH 1¼" MIN. FLANGE DEPTH

NOTE: THIS DETAIL FOR USE AT METAL STUD WALLS ONLY

NON–LOAD BEARING INTERIOR HEADERS

SCALE 3" = 1'–0" 6

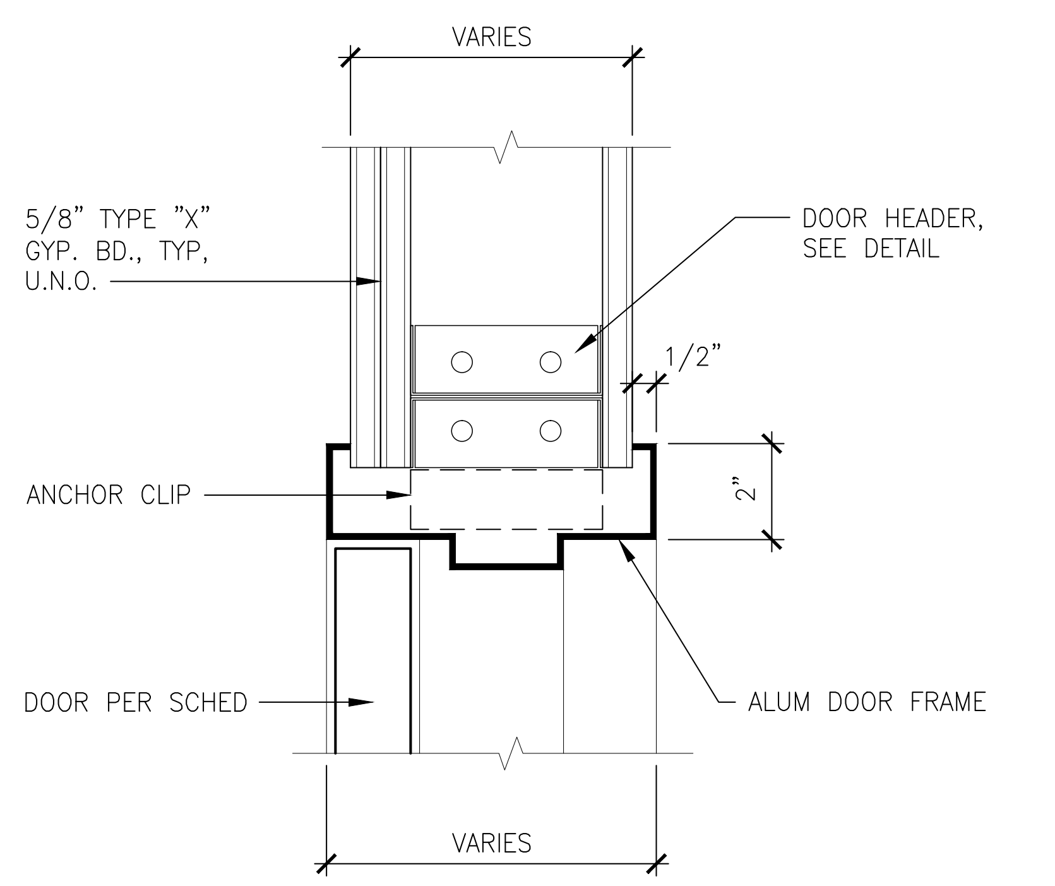

INTERIOR DOOR HEAD

SCALE 3" = 1'–0" 7

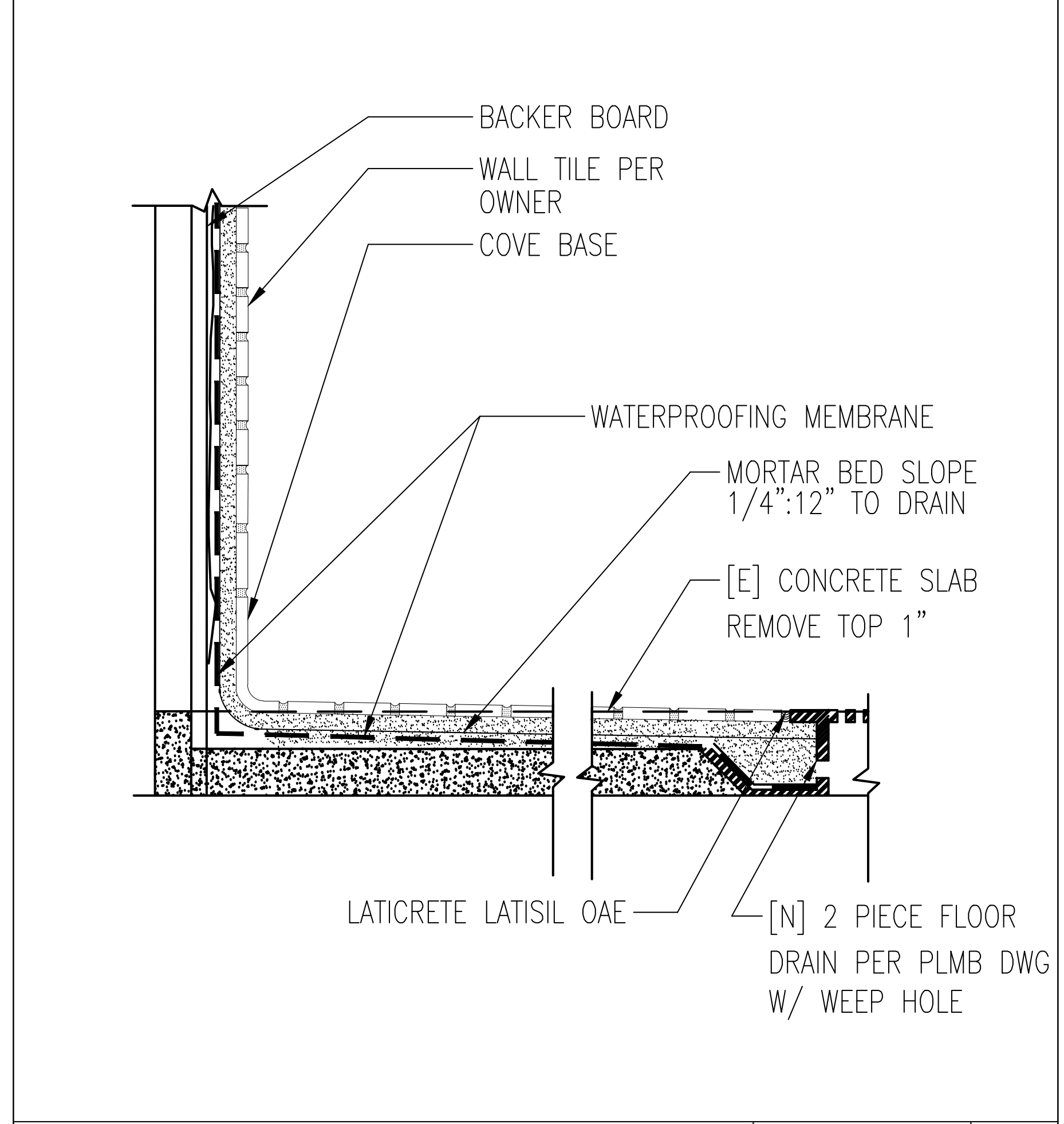

FLOOR DRAIN O/ [E] CONC SLAB

SCALE NTS 4

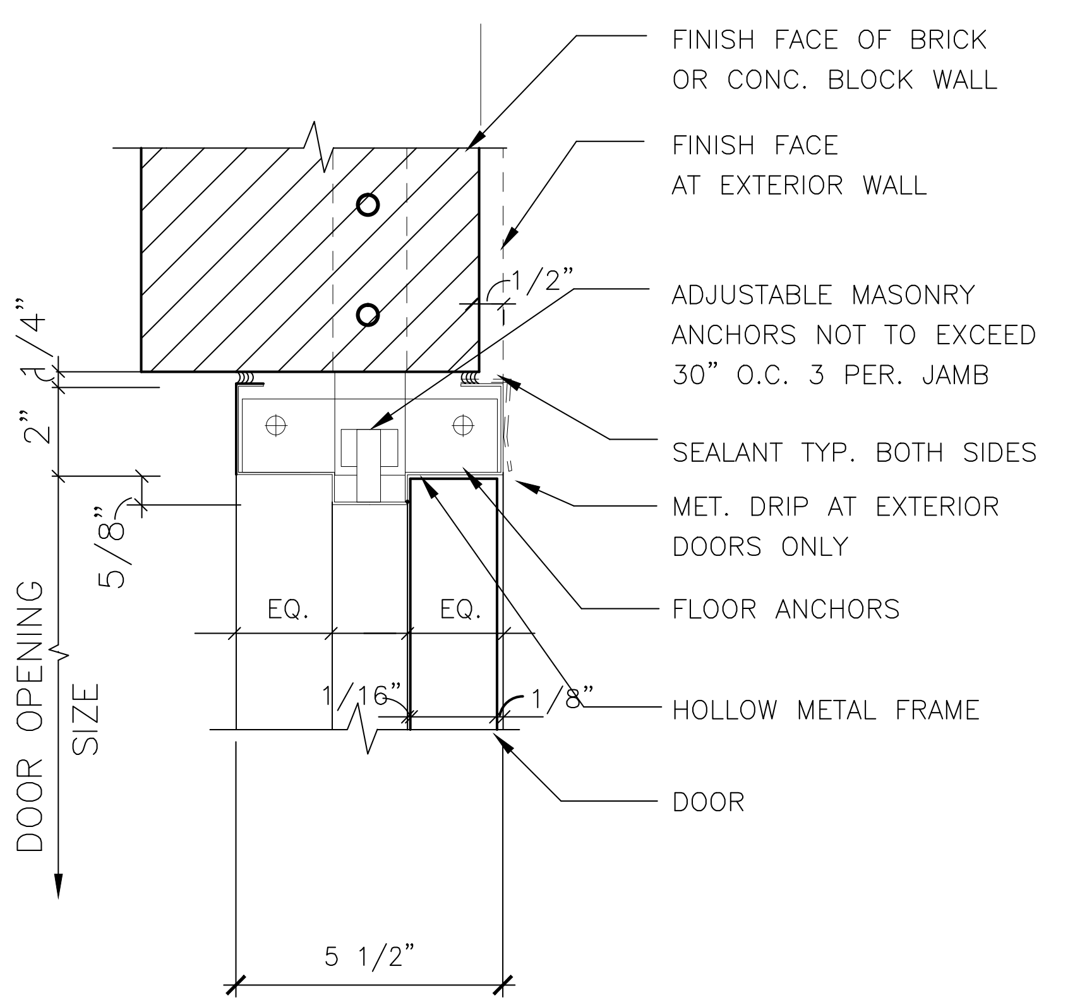

NOTE: HEAD–JAMB SIMILAR

EXTERIOR DOOR HEAD

SCALE 3" = 1'–0" 3

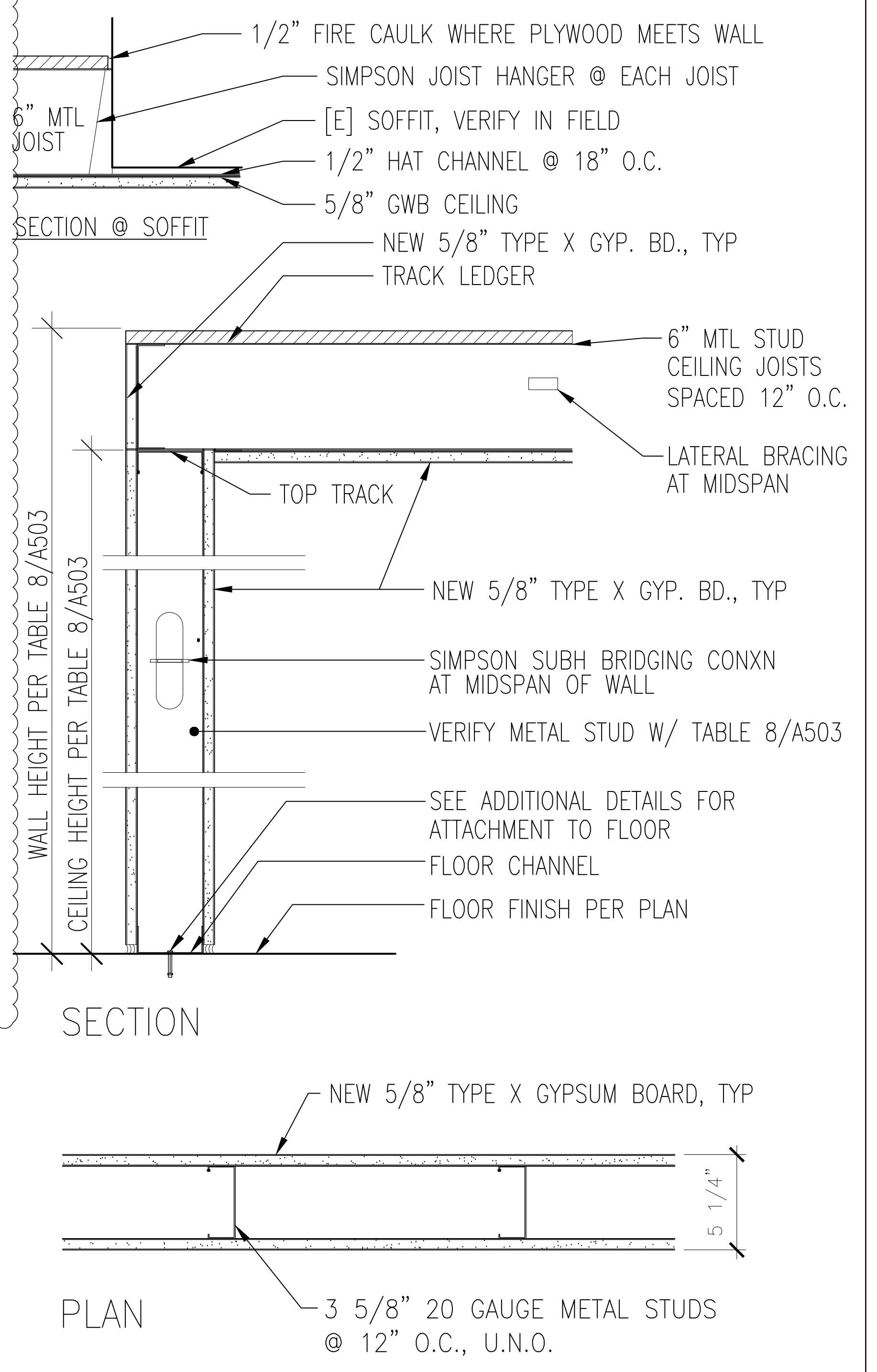

ITEM #13–1.1
CBC TABLE 721.1(2)

GYPSUM WALLBOARD, METAL STUDS
ONE OR MORE LAYERS 5/8" TYPE X GYPSUM WALLBOARD OR VENEER BASE APPLIED AT RIGHT ANGLES OR PARALLEL TO EACH SIDE OF METAL STUDS WITH 1" TYPE S DRYWALL SCREWS 8" o.c. TO VERTICAL EDGES AND 12" o.c. TO TOP AND BOTTOM RUNNERS AND INTERMEDIATE STUDS. STAGGER ALL VERTICAL AND HORIZONTAL JOINTS 24" o.c. EACH SIDE AND OPPOSITE SIDES. (NON–LOADBEARING)

* VERIFY ALTERNATE STUD SIZES, ALLOWABLE HEIGHT AND STUD SPACING WITH ARCHITECT PRIOR TO INSTALLATION. NOTIFY ARCHITECT OF ANY CHANGE IN STUD SIZE PRIOR TO INSTALLATION.

INTERIOR METAL STUD PARTITION

SCALE 1 1/2"=1'–0" 1

GREG KORN AIA
ARCHITECTS

INTERIOR ALTERATION

2525 MOORPARK RD
THOUSAND OAKS, CA 91362

Client
Andrew Mooney, Park Planner
CONEJO RECREATION & PARK DISTRICT
403 W. Hillcrest Drive
Thousand Oaks CA 91360
(805) 495-6471
amooney@crpd.org

Architect
G. Ian Korn, AIA
GKA Architects
351 Rolling Oaks Dr Ste 202
Thousand Oaks, CA 91361
gkorn@gka-arc.com
(805) 370-1300

MEP Engineer
Arash Nazari, PE
A&N Design Group Inc
21550 Oxnard Street #300
Woodland Hills, CA 91367
818-288-4361
arash@an-dg.com

Plan Examiner
TBD
City of Thousand Oaks
Building Division
2100 E Thousand Oaks Blvd
Thousand Oaks, CA 91361
(805) 449-2100

No.	Description	Date
1	Schematic Design to Client	08.07.19
2	Schematic Design to Client- Storage	08.27.19
3	Building Dept Submittal	09.23.19
4	Building Dept Corrections	10.25.19
5	Public Works Corrections	11.07.19
6	CDs to Client- Storage	01.13.20
7	CDs to Client- Storage Rev	01.21.20

Project number	2019003
Date	01.21.20
Drawn by	GK
Checked by	GK

Drawing Name
INTERIOR WALL DETAILS

Drawing No. PW1
A-503.00

NOTE: DO NOT SCALE DRAWINGS
Scale AS NOTED
Page 04/14

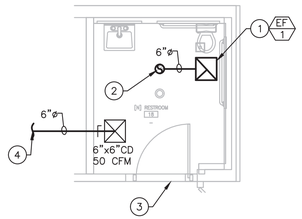

SHEET NOTES

1. CEILING MOUNTED EXHAUST FAN. PROVIDE FLEXIBLE DUCT CONNECTION AND BACKDRAFT DAMPER. FAN TO BE CONTROLLED BY LIGHT SWITCH.
2. 6"ø EXHAUST DUCT UP THROUGH ROOF. PROVIDE BRONZE COLOR ROOF CAP ON THE ROOF.
3. DOOR UNDERCUT.
4. EXTEND SUPPLY DUCT TO CONNECT TO THE MAIN EXISTING SUPPLY DUCT. VERIFY EXACT LOCATION ON SITE

1 MECHANICAL ENLARGED FLOOR PLAN

SCALE: 1/4" = 1'-0"

Ceiling Exhaust Fan

Qty	EF 1 Mark	Greenheck Model	Volume (CFM)	External SP / Total SP (in wg)	FRPM	Operating Power (hp)	Weight (Lb.)	Motor Information: Size (hp)	V/C/P	Encl:	Motor RPM	Windings	FLA
1	EF-1	SP-B110	100	0.2 / 0.201	950	0.04	11	NA	115/60/1	OP	950	1	NA

OPTIONS AND ACCESSORIES

UL/cUL 507 Listed - Electric Fan
Designer Grille
1 Functon Switch, Single Pole Rocker (PN: 872243), Shipped Loose
Round Duct Connection
Polypropylene Wheel Material

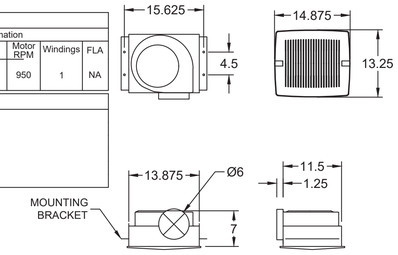

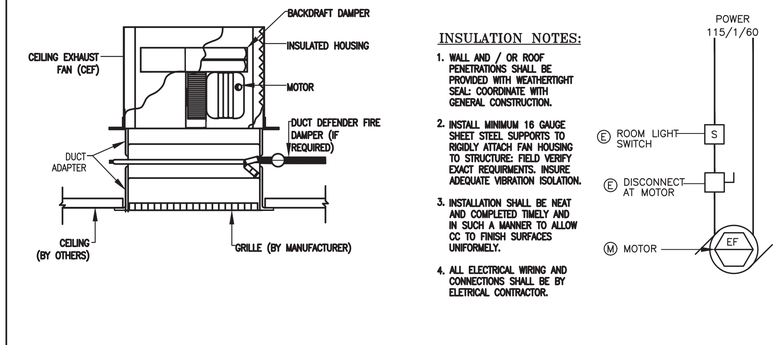

INSULATION NOTES:

1. WALL AND / OR ROOF PENETRATIONS SHALL BE PROVIDED WITH WEATHERTIGHT SEAL: COORDINATE WITH GENERAL CONSTRUCTION.
2. INSTALL MINIMUM 16 GAUGE SHEET STEEL SUPPORTS TO RIGIDLY ATTACH FAN HOUSING TO STRUCTURE: FIELD VERIFY EXACT REQUIRMENTS. INSURE ADEQUATE VIBRATION ISOLATION.
3. INSTALLATION SHALL BE NEAT AND COMPLETED TIMELY AND IN SUCH A MANNER TO ALLOW CC TO FINISH SURFACES UNIFORMELY.
4. ALL ELECTRICAL WIRING AND CONNECTIONS SHALL BE BY ELETRICAL CONTRACTOR.

CEILING EXHAUST FAN DETAIL AND WIRING

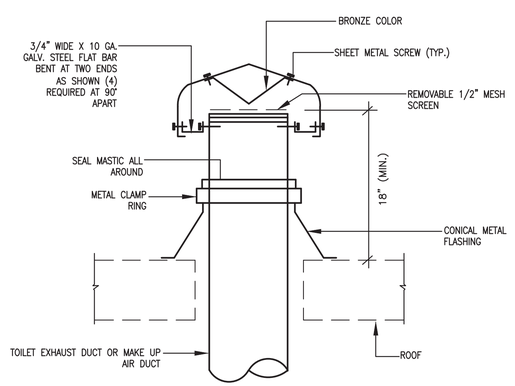

ROOF CAP DETAIL

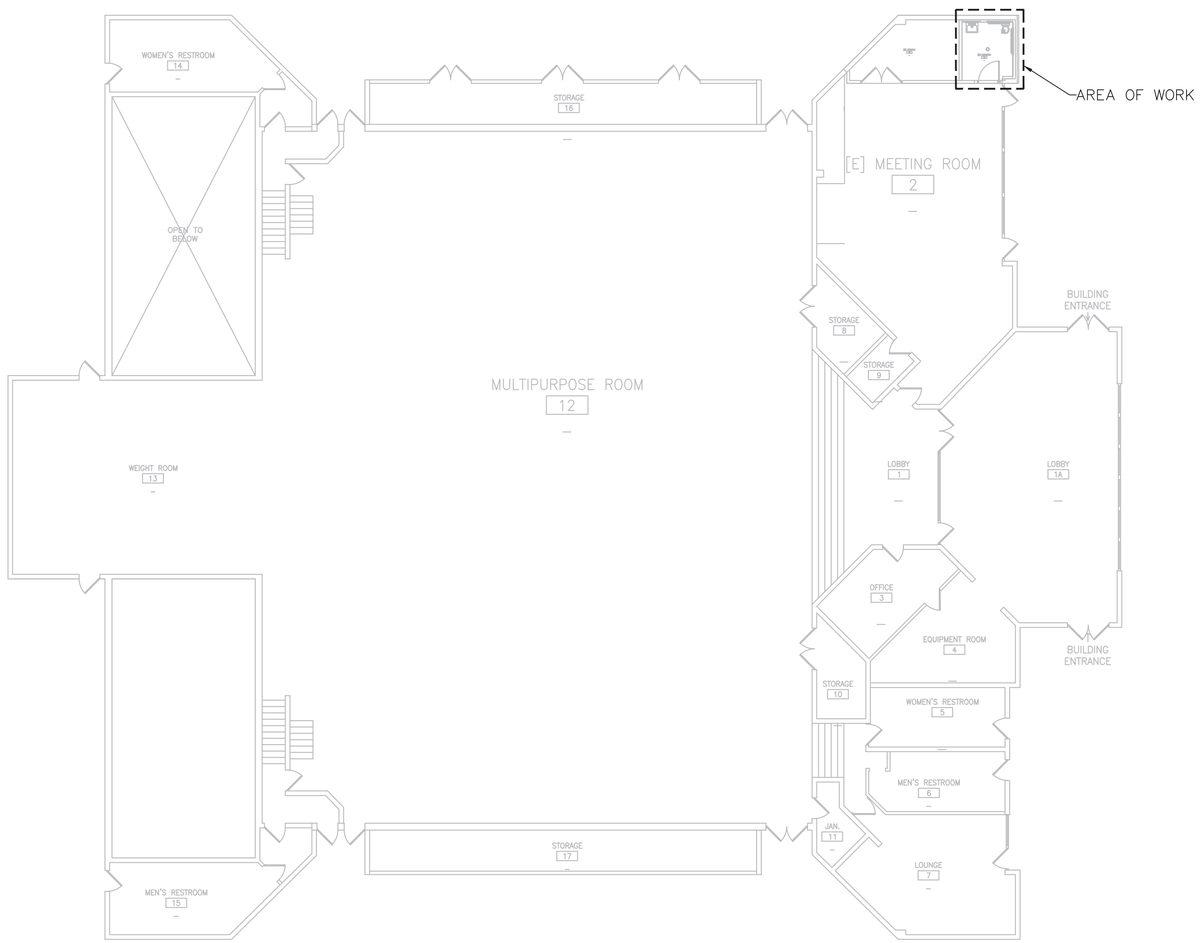

2 MECHANICAL OVERALL PLAN

SCALE: N.T.S.

GKA ARCHITECTS

BUILDING ALTERATIONS

THOUSAND OAKS COMMUNITY CENTER
CHILDREN'S RESTROOM
2525 MOORPARK RD.,
THOUSAND OAKS, CA 91362

CLIENT: CONEJO RECREATION & PARK DISTRICT

Architect
G. Korn, AIA
GKA Architects
1301 N La Brea Ave
Inglewood, CA 90302
gkorn@gka-arc.com

A & N DESIGN GROUP
MECHANICAL · PLUMBING · ELECTRICAL
21550 OXNARD STREET #300
WOODLAND HILLS, CA 91367
TEL: (818)-288-4361
FAX: (818)-758-0087

REGISTERED PROFESSIONAL ENGINEER ARASH NAJARI No. M-34638 EXP. 12-31-19 MECHANICAL STATE OF CALIFORNIA

No.	Description	Date

Project number	
Date	08.21.19
Drawn by	AN
Checked by	AN
Drawing Name	MECHANICAL PLAN
Drawing No.	M-1.0
Scale (NOTE: DO NOT SCALE DRAWING)	AS SHOWN

PLUMBING FIXTURE SCHEDULE

FIXT. ID	DESCRIPTION	MANUFACTURER	MODEL	ROUGH-IN W	ROUGH-IN V	ROUGH-IN CW	ROUGH-IN HW	REMARKS
WC-1	WATER CLOSET (F.V.)	SLOAN	ST-2309	4"	2"	1-1/4"	–	FLOOR MOUNT SLOAN MODEL #ST-2309, JUNIOR WATER CLOSET, FLUSH VOLUME: 1.28 GPF, WHITE VITREOUS CHINA, 10 3/4" RIM HEIGHT FOR TODDLERS. MINIMUM WATER PRESSURE: 25 PSI, FLUSH: SLOAN, MODEL #ROYAL 111 ESS HARDWIRED-1.28-TMO. POLISHED CHROME FINISH, PROVIDE SLOAN EL-154 (BOX MOUNT) 120VAC INPUT / 24VAC OUTPUT TRANSFORMER. MODEL #0345154PK. VERIFY PLUMBING FIXTURE SPECIFICATION W/ ARCHITECT FOR EXACT MODEL PRIOR TO ORDER AND INSTALL
LV-1	LAVATORY FAUCET	SLOAN SLOAN	SS-3003 ETF-80	2"	1-1/2"	1/2"	1/2"	WALL MOUNTED SLOAN, MODEL# SS-3003 BACKSPLASH LAVATORY. FAUCET:SLOAN, MODEL#:ETF-80, HARDWIRED POWERED, PROVIDE WITH BOX TRANSFORMER VERIFY SPECIFICATION W/ ARCHITECT FOR EXACT MODEL PRIOR TO ORDER AND INSTALL
WCO	WALL CLEANOUT	WATTS	CO-380	SAME AS PIPE SIZE	–	–	–	WATTS DRAINAGE CO-380 CAST IRON CLEANOUT WITH GASKETED BRASS COUNTERSUNK PLUG, AND NO HUB CONNECTION.
WHA	WATER HAMMER ARRESTOR	WATTS	LF15M2	–	–	1/2"	–	LEED FREE, OPERATING PRESSURE: DESIGNED TO OPERATE ON ALL DOMESTIC AND COMMERCIAL LINES @ 150PSI WORKING PRESSURE. TEMPERATURE RANGE: 33°F TO 180°F.
IWH-1	INSTANTANEOUS WATER HEATER	CHRONOMITE	SR-20L/120	–	–	1/2"	1/2"	CHRONOMITE ELECTRIC INSTANTANEOUS HOT WATER HEATER, ACTIVATION AT 0.35 GPM, 41°F TEMP RISE @ 0.4GPM, 120V/1PH/60HZ/20AMPS, OR EQUAL.
HD-1	HAND DRYER	SLOAN	EHD-502-BN-HEPA	–	–	–	–	SLOAN EHD-502-BN-HEPA SENSOR OPERATED WALL MOUNTED HAND DRYER 208V/1PH/60HZ/5.6-6.2AMPS. HARDWIRED
MXV-1	MIXING VALVE	HYDROGUARD	LFLM495	–	–	1/2"	1/2"	HYDROGUARD, SERIES # LFLM495 MIXING VALVE
FD-1	FLOOR DRAIN	WATTS	FD-320-Y	3"	2"	–	–	WATTS DRAINAGE FD-320-Y EPOXY COATED CAST IRON AREA DRAIN WITH ANCHOR FLANGE, WEEPHOLES, 8"DIAMETER FIXED TOP WITH HEEL PROOF DUCTILE IRON GRATE, AND NO HUB (STANDARD) OUTLET
TP-1	TRAP PRIMER	WATTS	LFTP300-DR	–	–	1/2"	–	WATTS DRAINAGE LFTP300-DR PRESSURE DROP ACTIVATED LEAD FREE*BRASS TRAP PRIMER WITH EPDM SEALS, INTEGRAL AIR GAP, AND 1/2"SWEAT OR NPT THREADED CONNECTIONS. OPERATING PRESSURE 25 PSI – 125 PSI.

FIXTURE FLOW RATES BASED ON LA GREEN BUILDING CODE 5.303.2

FIXTURE TYPE	MAXIMUM ALLOWABLE FLOW RATE
SHOWERHEADS	1.8 GPM @ 80 PSI
LAVATORY FAUCETS – RESIDENTIAL	1.2 GPM @ 60 PSI[1,3]
LAVATORY FAUCETS – NON-RESIDENTIAL	0.4 GPM @ 60 PSI[1,3]
KITCHEN FAUCETS	1.5 GPM @ 60 PSI[2,4,5]
WASH FOUNTAINS	1.8 GPM FOR EVERY 20 in. OF RIM SPACE @ 60 PSI
METERING FAUCETS	0.2 GALLONS PER CYCLE
METERING FAUCETS FOR WASH FOUNTAINS	0.2 GPM FOR EVERY 20 in. OF RIM SPACE @ 60 PSI
GRAVITY TANK TYPE WATER CLOSETS	1.28 GALLONS/FLUSH[6]
FLUSHOMETER TANK WATER CLOSETS	1.28 GALLONS/FLUSH[6]
FLUSHOMETER VALVE WATER CLOSETS	1.28 GALLONS/FLUSH[6]
URINALS	0.125 GALLONS/FLUSH
CLOTHES WASHER	ENERGY-STAR CERTIFIED
DISHWASHER	ENERGY-STAR CERTIFIED

[1] Lavatory faucet shall not have a flow rates less than 0.8 gmp at 20 psi
[2] Kitchen faucets may temporarily increase flow above the maximum rate, but not above 2.2 gpm @ 60 psi and must default to a maximum flow rate of 1.8 gpm @ 60 psi.
[3] Where complying faucets are unavailable, aerators or other means may be used to achieve reduction.
[4] Kitchen faucets with a maximum 1.8 gpm flow rate may be installed in buildings that have water closets with a maximum flush rate of 1.06 gallons/flush installed throughout.
[5] This requirement does not apply to faucets in commercial kitchens.
[6] Includes single and dual flush water closets with an effective flush of 1.28 gallons or less.
Single Flush Toilets – The effective flush volume shall not exceed 1.28 gallons (4.8 liters). The effective flush volume is the average flush volume when tested in accordance with ASME A112.19.233.2.
Dual Flush Toilets – The effective flush volume shall not exceed 1.28 gallons (4.8 liters). The effective flush volume is defined as the composite, average flush volume of two reduced flushes and one full flush. Flush volumes will be tested in accordance with ASME A112.19.2 and ASME A112.19.14.

PLAN CHECK NOTES

- ALL FIXTURES, EQUIPMENT, PIPING AND MATERIALS SHALL BE LISTED.
- ALL PLUMBING FIXTURES SHALL MEET THE FLOW REQUIREMENTS SPECIFIED IN THE LOS ANGELES PLUMBING CODE.
- SHOWERS SHALL BE PROVIDED WITH INDIVIDUAL TEMPERING VALVES.
- PRESSURE RELIEF VALVES FOR WATER HEATER INSTALLED INSIDE A BUILDING SHALL DISCHARGE TO A FLOOR DRAIN, FLOOR SINK OR SIMILAR FIXTURE.
- WATER PIPE AND FITTINGS WITH A LEAD CONTENT WHICH EXCEEDS 0.25% SHALL BE PROHIBITED IN SYSTEMS CONVEYING POTABLE WATER

FIXTURE UNIT CALCULATION

FIXT. ID	QTY.	DESCRIPTION	WATER PIPING CW: CW F.U. PER FIXTURE	WATER PIPING CW: TOTAL CW F.U.	WATER PIPING HW: HW F.U. PER FIXTURE	WATER PIPING HW: TOTAL HW F.U.	SEWER PIPING: F.U. PER FIXTURE	SEWER PIPING: TOTAL SANITARY SEWER
WC-1	1	WATER CLOSET (F.V.)	5	5	–	–	4	4
LV-1	1	LAVATORY	1	1	1	1	1	1
FD-1	1	FLOOR DRAIN	–	–	–	–	2	2
		TOTAL		6		1		7

NOTES:
1. WATER SUPPLY FIXTURE UNITS ARE BASED ON 2016 CPC, APPENDIX A, TABLE A103.1.
2. DRAINAGE FIXTURE UNITS ARE BASED ON 2016 CPC, CHAPTER 7, TABLE 702.1.
3. DOMESTIC WATER PIPE SIZING: DOCUMENT P/PC 2014-009

MATERIAL SPECIFICATIONS

	SERVICES	CAST IRON NO-HUB	GALV. STEEL SCH. 40	BLACK STEEL SCH 40	ABS PIPE ASTM D 2661, SCH 40	TYPE M COPPER	TYPE L COPPER	TYPE K COPPER	PEX	CPVC 41 SDR11	CPVC SCH. 80	AQUATHERM GREEN (SDR 11) NON FASER
COLD WATER	ABOVE GROUND						•					
	BELOW GROUND							•				
HOT/TEMPER WATER	ABOVE GROUND						•					
	BELOW GROUND							•				
WASTE	ABOVE GROUND	•										
	BELOW GROUND	•										
VENT	ABOVE GROUND	•										
	BELOW GROUND	•										

PIPING INSULATION SCHEDULE

PIPE SIZE:	UP TO 2"	2" AND LARGER
INSULATION THICKNESS	MINIMUM PIPE DIAMETER SIZE	2"

ALL INSULATION SHALL BE W/R VALUES OF 4.0 TO 4.6

WHA SCHEDULE

MARK	MANUFACTURER/ MODEL #	FIXTURE UNITS	INLET SIZE	REMARKS
WHA-A	WATTS LF15M2-A	1-11	1/2"	PER PDI STANDARD PDI-WH 201
WHA-B	WATTS LF15M2-B	12-32	3/4"	PER PDI STANDARD PDI-WH 201
WHA-C	WATTS LF15M2-C	33-60	1"	PER PDI STANDARD PDI-WH 201

PLUMBING LEGEND

SYMBOL	ABBREVIATION	DESCRIPTION
	CW	COLD WATER PIPING
	HW	HOT WATER PIPING (140°F)
	HWR	HOT WATER RETURN PIPING
FCW	FCW	FILTERED COLD WATER
	SS OR W	SOIL OR WASTE PIPING BELOW GRADE
	SS OR W	SOIL OR WASTE PIPING ABOVE GRADE
GW	GW	GREASE WASTE
CWV	CWV	COMBINATION WASTE & VENT
	V	VENT PIPING
CD	CD	CONDENSATE DRAIN PIPING
ID	ID (D)	INDIRECT DRAIN
G	G	LOW PRESSURE GAS PIPING
MPG	MPG	MEDIUM PRESSURE GAS PIPING
RO	RO	REVERSE OSMOSIS
SD	SD	STORM DRAIN PIPING
RD	RD	ROOF DRAIN/ROOF DRAIN PIPING
OFD	OFD/OFL	OVERFLOW DRAIN/OVERFLOW DRAIN PIPING
	WHA	WATER HAMMER ARRESTOR
	P.O.C.	POINT-OF-CONNECTION
		GAS COCK WITH UNION
		CAPPED
		UNION
	UP	PIPE UP
	DN	PIPE DOWN
	DN	PIPE TEE DOWN
	BV	BALL VALVE
	BV	BALANCING VALVE
	SOV	ISOLATING SHUT-OFF VALVE
	GV	GATE VALVE
	GV	GLOBE VALVE
	CV	CHECK VALVE
	BFP	BACKFLOW PREVENTOR
	BFP	DOUBLE CHECK BACKFLOW PREVENTOR
	RED	REDUCER
	PUMP	PUMP
	FCO/GCO	FLOOR CLEANOUT OR GRADE CLEANOUT
	WCO	WALL CLEANOUT
	VTR	VENT THRU ROOF
	FS	FLOOR SINK
	HD	HUB DRAIN (CASE & COIL DRAINS)
	FD	FLOOR DRAIN
		FIRE SPRINKLER RISER
		PRESSURE GAUGE
		PRESSURE REDUCING VALVE
		THERMOSTAT
		T & P RELIEF VALVE W/ PIPE TO DRAIN
		SOLENOID VALVE
	MX	MIXING VALVE
		FLEXIBLE CONNECTION
		STRAINER
M	M	METER

ABBREVIATION	
AFF	ABOVE FINISHED FLOOR
AFG	ABOVE FINISHED GRADE
BFF	BELOW FINISHED FLOOR
BG	BELOW GROUND
(E)	EXISTING
(N)	NEW
NTS	NOT TO SCALE
IE	INVERT ELEVATION
QTY.	QUANTITY
V.I.F.	VERIFY IN FIELD
FU	FIXTURE UNIT
% / S	SLOPE
S.O.V.	SHUT OFF VALVE
TYP	TYPICAL
HD	HUB DRAIN
FS	FLOOR SINK
FD	FLOOR DRAIN
FFE	FINISHED FLOOR ELEVATION
MBH	THOUSAND BTUH'S/HOUR
BTU	BRITISH THERMAL UNIT
CFH	CUBIC FEET PER HOUR

NOTE: THIS IS A STANDARD SYMBOL LIST AND NOT ALL ITEMS LISTED MAY BE USED.

GENERAL NOTES

1. SOIL AND WASTE PIPE SHALL SLOPE 2% MINIMUM, UNLESS OTHERWISE NOTED OR REQUIRED BY CODE.

2. ALL DRAIN, WATER & GAS LINES SHALL BE KEPT TIGHT TO THE UNDERSIDE OF EQUIPMENT & SECURED IN PLACE.

3. CONTRACTOR SHALL VERIFY THE LOCATION OF THE SANITARY SEWER AT SITE AND SHALL REVISE THE SEWER SYSTEM AS REQUIRED.

4. PROVIDE TRAP PRIMERS FOR FLOOR DRAINS.

5. ALL CLEANOUTS SHALL BE INSTALLED WHERE READILY ACCESSIBLE. THE CONTRACTOR SHALL COORDINATE ALL CLEANOUT LOCATIONS WITH EQUIPMENT, CABINETS, ETC. AND THE ARCHITECT PRIOR TO ANY INSTALLATION.

6. ALL VALVES, TRAP PRIMERS, WATER HAMMERS ARRESTORS OR OTHER EQUIPMENT SHOWN IN WALLS OR ABOVE NON-ACCESSIBLE CEILING SHALL BE INSTALLED BEHIND AN ACCESS PANEL.

7. ALL PLUMBING FIXTURE VENTS TO TERMINATE A MINIMUM OF 12 INCHES FROM ANY VERTICAL SURFACE AND 10 FEET FROM ANY OUTSIDE AIR INTAKE.

8. CONTRACTOR SHALL PROVIDE CONDENSATE DRAINS FROM A/C UNITS TO APPROVED DRAIN POINT.

9. INSTALLATION SHALL CONFORM TO THE ENERGY CODE FOR NEW NON-RESIDENTIAL BUILDINGS.

10. PRIOR TO COMMENCING WORK ON THIS PROJECT, CONTRACTOR SHALL VERIFY DEPTH, SIZE, LOCATION AND CONDITION OF ALL EXISTING UTILITIES IN FIELD BEFORE STARTING WORK. SHOULD CONDITIONS EXIST OTHER THAN THOSE INDICATED WHICH WOULD CAUSE THE DESIGN TO BE ALTERED, CONTRACTOR SHALL NOTIFY OWNER IMMEDIATELY.

11. CONTRACTOR SHALL COORDINATE INSTALLATION OF PLUMBING WORK WITH ALL OTHER TRADES SO AS TO AVOID UNNECESSARY DELAY OR INTERFERENCES. CONTRACTOR TO REVIEW ARCHITECTURAL AND EQUIPMENT SHEETS.

12. ALL PLUMBING WORK AND MATERIALS SHALL BE INSTALLED IN ACCORDANCE WITH ALL APPLICABLE STATE & LOCAL ORDINANCES & REGULATIONS HAVING JURISDICTION. CONTRACTOR SHALL OBTAIN ALL APPROVALS REQUIRED FROM REGULATING AGENCIES BEFORE STARTING WORK. ALL PLUMBING WORK & MATERIALS SHALL MEET THE REQUIREMENTS OF THE LATEST EDITIONS OF THE LOCAL PLUMBING CODE, UNLESS OTHERWISE REQUIRED BY THE DEPARTMENT OF BUILDING & SAFETY. OBTAIN & PAY FOR ALL PERMITS, FEES & INSPECTIONS REQUIRED BY GOVERNING AUTHORITIES. ALL PIPING TO BE CONCEALED UNLESS NOTED OTHERWISE.

13. THE EQUIPMENT ROUGH-INS AS SHOWN ARE BASED UPON AVAILABLE INFORMATION HOWEVER, IN SOME INSTANCES, THE OWNER OR SUPPLIER MAY SUBSTITUTE OR THE EQUIPMENT ITEM MAY VARY FROM WHAT IS SHOWN, THEREFORE, THE CONTRACTOR SHALL VERIFY ALL CRITICAL DIMENSIONS WITH THE OWNER PRIOR TO CONSTRUCTION. FAILURE OF THE CONTRACTOR TO VERIFY THESE DIMENSIONS SHALL PLACE THE RESPONSIBILITY FOR ANY SUBSEQUENT RELOCATION DIRECTLY ON THE CONTRACTOR.

14. CONTRACTOR SHALL PROVIDE GAS PIPING TO UNITS AND ALL FINAL CONNECTIONS REQUIRED FOR OPERATION.

15. INSTALL SHUT-OFF VALVES ON ALL HOT & COLD WATER LINES TO FIXTURE OR APPLIANCE.

16. PROVIDE A LEVER HANDLE GAS SHUTOFF VALVE IN THE BRANCH PIPING OF EACH APPLIANCE OR PIECE OF EQUIPMENT. FOR EACH APPLIANCE INSTALL QUICK DISCONNECT, FLEXIBLE PIPE AND RESTRAINING DEVICE FURNISHED BY OWNER. PROVIDE PRESSURE REDUCING VALVES AT EACH PIECE OF EQUIPMENT OR APPLIANCE IF GAS PRESSURE GREATER THAN 8" IS USED DOWNSTREAM FROM THE METER.

17. ALL VALVES, UNIONS, ETC. TO BE SAME SIZE AS PIPE UNLESS OTHERWISE INDICATED ON DRAWINGS.

18. ENSURE THAT ANY PENETRATIONS MADE THROUGH THE COOLER/FREEZER UNIT ARE TO BE SEALED PROPERLY TO PREVENT WATER INFLATION.

19. ENSURE THAT ALL JOINTS, GAPS AND SPACES ALONG THE PERIMETER OF PLUMBING FIXTURES ARE TO BE SEALED WITH NSF APPROVED SEALANT TO WITHIN 1/32".

20. REFER TO STRUCTURAL DRAWINGS FOR PIPING AND EQUIPMENT SUPPORT DETAILS.

21. CONSTRUCTION TO CONFORM WITH:
- 2016 CALIFORNIA BUILDING CODE, WITH LOCAL AMENDMENTS.
- 2016 CALIFORNIA MECHANICAL CODE, WITH LOCAL AMENDMENTS.
- 2016 CALIFORNIA PLUMBING CODE. WITH LOCAL AMENDMENTS.
- 2016 CALIFORNIA ELECTRICAL CODE, WITH LOCAL AMENDMENTS.
- 2016 CALIFORNIA FIRE CODE, WITH LOCAL AMENDMENTS.
- TITLE 24 ENERGY EFFICIENCY STANDARDS, 2016 EDITION.
- ALONG WITH ANY OTHER APPLICABLE LOCAL CODE AND STATE LAWS AND REGULATIONS.

24. FLOOR SINKS, TRAPS, AND SANITARY DRAIN PIPING WITHIN 10 FEET OF DRAIN RECEIVING CONDENSATE AND EQUIPMENT DRAIN WATER BELOW 60 DEGREE F SHALL BE INSULATED WITH 1" THICK DENSITY GLASS FIBER INSULATION.

DRAWING SCHEDULE

SHEET NUMBER	DESCRIPTION
P1.0	PLUMBING LEGEND, GENERAL NOTES & SCHEDULES
P1.1	PLUMBING SPECIFICATIONS
P2.0	PLUMBING NEW PLANS AND ISOMETRIC PIPING DIAGRAMS
P3.0	PLUMBING DETAILS

GKA ARCHITECTS

BUILDING ALTERATIONS

THOUSAND OAKS COMMUNITY CENTER
CHILDREN'S RESTROOM
2525 WOORPARK RD.,
THOUSAND OAKS, CA 91362

CLIENT: CONEJO RECREATION & PARK DISTRICT

Architect
G. Korn, AIA
GKA Architects
1301 N La Brea Ave
Inglewood, CA 90302
gkorn@gka-arc.com

A & N DESIGN GROUP
MECHANICAL · PLUMBING · ELECTRICAL
21550 OXNARD STREET #300
WOODLAND HILLS, CA 91367
TEL: (818)-288-4361
FAX: (818)-758-0087

No.	Description	Date

REGISTERED PROFESSIONAL ENGINEER
ARASH NAZARI
No. M-34638
EXP. 12-31-19
MECHANICAL
STATE OF CALIFORNIA

Project number	
Date	08.12.19
Drawn by	AN
Checked by	AN
Drawing Name	PLUMBING NOTES & SCHEDULES
Drawing No.	P-1.0
Scale	AS SHOWN

PLUMBING SPECIFICATIONS (DIVISION 22 00 00)

1.00 – GENERAL

1.01 DESCRIPTION OF WORK

FURNISH ALL LABOR, MATERIALS, EQUIPMENT AND SERVICES REQUIRED FOR AND/OR REASONABLY INCIDENTAL TO THE COMPLETION OF THE FOLLOWING WORK.

A. SANITARY WASTE AND VENT PIPING SYSTEM INCLUDING CONNECTIONS TO BUILDING SEWER AS SHOWN.
B. DOMESTIC HOT AND COLD WATER SYSTEMS INCLUDING WATER HEATER, AND RELATED ACCESSORIES AND CONTROLS. CONNECTION TO BUILDING WATER AS SHOWN.
C. PLUMBING FIXTURES, TRIM AND ACCESSORIES INCLUDING INSTALLATION AND SUPPORT.
D. FLASHING AND SEALING OF ROOF AND EXTERIOR WALL PENETRATIONS FOR WATER TIGHTNESS.
E. CAULKING AND SEALING OF FLOOR AND WALL PENETRATIONS AND FORMED SHAFT PENETRATIONS.
F. BACKING FOR SECURING FIXTURES, TRIM AND PIPING.
G. ACCESS DOORS WHERE SHOWN OR REQUIRED BY CODE.
H. HANGERS, SUPPORTS, AND GUIDES.
I. CLEANUP OF DEBRIS AND FINAL CLEANUP OF DRAINS, FIXTURES AND EQUIPMENT.
J. RECORD DRAWINGS AND OPERATING MANUALS.
K. LICENSE, PERMITS AND ASSOCIATED FEES.
L. CUTTING, DRILLING AND PATCHING FOR ALL SURFACES IN RELATION TO PLUMBING WORK.
M. CONDENSATE DRAINS FROM HVAC EQUIPMENT, AND GAS PIPING

1.02 RELATED WORK INCLUDED UNDER OTHER DIVISIONS.

A. DIVISION 21 00 00– FIRE SUPPRESSION
B. DIVISION 23 00 00– HEATING, VENTILATING AND AIR CONDITIONING
C. DIVISION 26 00 00– ELECTRICAL

1.03 EXAMINATION OF SITE

A. VISIT SITE BEFORE SUBMITTING BID AND CHECK LOCATION OF ALL EXISTING CONDITIONS WHICH WILL AFFECT THIS WORK, VERIFY DIMENSIONS AND LOCATIONS SHOWN ON DRAWINGS AND COVER ALL COSTS. CONTRACTOR SHALL ASSUME REASONABLE VARIATIONS OR MINOR OMISSIONS AND SHALL COMPLETE PROPOSED WORK WITHOUT ADDITIONAL COST. FAILURE TO VISIT SITE WILL NOT LESSEN RESPONSIBILITY OR ENTITLE ADDITIONAL COMPENSATION FOR WORK NOT INCLUDED IN PROPOSAL.

1.04 DRAWINGS

THE ACCOMPANYING DRAWINGS SHALL BE CONSIDERED PART OF THESE SPECIFICATIONS. WORK AND MATERIALS SHOWN ON THE DRAWINGS AND NOT MENTIONED IN THE SPECIFICATIONS AND VICE VERSA SHALL BE EXECUTED AS IF SPECIFICALLY MENTIONED OR SHOWN IN BOTH. THE DRAWINGS SHALL BE CONSIDERED AS SCHEMATIC IN NATURE AND MINOR MODIFICATIONS OF THE WORK TO COMPLY WITH THE STRUCTURE AS FOUND SHALL BE MADE.

1.05 RULES AND REGULATIONS

A. ALL WORK AND MATERIAL SHALL BE IN FULL ACCORDANCE WITH THE LATEST RULES AND REGULATIONS OF THE STATE FIRE MARSHAL AND OTHER APPLICABLE STATE AND LOCAL RULES AND REGULATIONS. NOTHING IN THESE DRAWINGS OR SPECIFICATIONS SHALL BE CONSTRUED TO PERMIT WORK NOT CONFORMING TO THESE CODES.

B. FURNISH WITHOUT ANY EXTRA CHARGE ANY ADDITIONAL MATERIAL AND LABOR WHEN REQUIRED TO COMPLY WITH THESE LAWS, ORDINANCES AND CODES REGARDLESS OF WHETHER SHOWN OR MENTIONED IN THESE SPECIFICATIONS OF DRAWINGS.

1.06 SUBMITTALS

A. SUBMIT FOR REVIEW TO THE OWNER A COMPLETE AND ALL–INCLUSIVE LIST OF EQUIPMENT AND MATERIALS PROPOSED FOR USE (6 COPIES), ACCOMPANIED BY MANUFACTURER'S DATA SHEETS. DATA SHALL BE FORWARDED IN A SINGLE PACKAGE WRITTEN 15 DAYS AFTER AWARD OF CONTRACT. SUBMIT SIX BLUELINE PRINTS AND ONE REPRODUCIBLE SHOP DRAWING SHOWING PROPOSED PLUMBING INSTALLATION. INCLUDE SIZES, LOCATIONS AND OTHER REQUIRED INFORMATION TO COORDINATE INSTALLATION WITH OTHER TRADES.

B. WITHIN 5 DAYS AFTER AWARD OF CONTRACT, SUBMIT 6 COPIES OF A LETTER STATING ANY MATERIALS THAT CONTRACTOR WISHES TO SUBSTITUTE, TO THE OWNER FOR APPROVAL. INCLUDE SUCH INFORMATION AS MANUFACTURER'S NAME, TYPE OF MATERIAL, CERTIFIED RATINGS, OVERALL APPEARANCE, AND NECESSARY INFORMATION TO EXPLAIN FUNCTION AND OPERATION OF MATERIAL. ALL PROPOSED SUBSTITUTIONS SHALL BE EQUAL IN QUALITY, DESIGN, UTILITY AND APPEARANCE TO MATERIAL, EQUIPMENT OR METHOD SPECIFIED.

1.07 AS–BUILT DRAWINGS

A SET OF PLUMBING PLANS WILL BE FURNISHED TO THE CONTRACTOR ON WHICH HE SHALL INDICATE THE INSTALLATION "AS–BUILT" AS THE WORK PROGRESSES. UPON COMPLETION OF THE WORK, A SET OR REPRODUCIBLE DRAWINGS SHALL BE OBTAINED FROM THE OWNER AT COST, AND ALL CHANGES AS NOTED ON THE RECORD SET OF PRINTS SHALL BE INCORPORATED THEREON. THIS SET OF REPRODUCIBLES, ALONG WITH ONE SET OF BLUEPRINTS, SHALL BE DELIVERED TO THE OWNER UPON COMPLETION AND BEFORE FINAL ACCEPTANCE OF THE PROJECT.

1.08 GUARANTEE

THE CONTRACTOR SHALL LEAVE THE ENTIRE INSTALLATION IN COMPLETE WORKING ORDER FREE FROM ANY DEFECTIVE MATERIAL, WORKMANSHIP OR FINISH. HE SHALL GUARANTEE TO REPAIR OR REPLACE, WITHOUT CHARGE, DEFECTS DUE TO FAULTY WORKMANSHIP OR MATERIAL FOR A PERIOD OF ONE YEAR FROM THE DATE OF FILING OF THE NOTICE OF COMPLETION.

1.09 OPERATION MANUALS AND OWNER INSTRUCTIONS

A. PROVIDE COMPLETE OPERATION AND MAINTENANCE MANUALS COVERING ALL PLUMBING SYSTEMS AND EQUIPMENT THAT HAVE BEEN INSTALLED. THREE (3) COPIES OF THE MANUAL SHALL BE BOUND IN HARDBACK BINDERS.

B. PROVIDE INSTRUCTIONS TO OWNER AS TO OPERATION OF ALL EQUIPMENT. INSTRUCTION PERIOD TO COMMENCE FOR MINIMUM OF (2) HOURS AND SHALL BE SCHEDULED AT OWNER'S CONVENIENCE.

1.10 CUTTING AND PATCHING

A. THE CONTRACTOR SHALL DO ALL CUTTING, DRILLING AND PATCHING WHICH MAY BE REQUIRED FOR THE INSTALLATION OF THE WORK UNDER THIS SECTION OF THE SPECIFICATIONS.

B. PATCHING SHALL BE OF THE SAME WORKMANSHIP, MATERIAL, AND FINISH AND SHALL MATCH ACCURATELY ALL SURROUNDING CONSTRUCTION IN A MANNER SATISFACTORY TO THE OWNER. NO CUTTING OF THE STRUCTURE SHALL BE PERMITTED WITHOUT WRITTEN APPROVAL OF THE OWNER.

2.00 – MATERIALS

2.01 PIPING

A. HUBLESS CAST IRON SOIL PIPE AND FITTINGS:

1. PIPE AND FITTINGS FOR BOTH UNDERGROUND AND ABOVEGROUND INSTALLATION SHALL BE NO–HUB CAST IRON PIPE AND FITTINGS MANUFACTURED FROM GRAY CAST IRON AND SHALL CONFORM TO ASTM A 888, AND CISPI 301 (CURRENT VERSION). ALL PIPE AND FITTINGS ARE TO BE INSTALLED IN ACCORDANCE WITH MANUFACTURER'S RECOMMENDATIONS AND LOCAL CODE REQUIREMENTS. PRODUCTS MUST BE MARKED WITH THE NAME OF THE USPTO REGISTERED TRADEMARK OF THE MANUFACTURER. ACCEPTABLE MANUFACTURERS ARE CHARLOTTE PIPE, STAR PIPE PRODUCTS, TYLER/AB&I OR APPROVED EQUAL.

2. STANDARD COUPLINGS SHALL BE USED FOR BRANCH AND MAIN PIPING AND SHALL CONFORM TO CISPI STANDARD 310, ASTM C 1227, AND ASTM C 564. COUPLINGS SHALL BE INSTALLED IN ACCORDANCE WITH THE MANUFACTURER'S BAND TIGHTENING SEQUENCE AND TORQUE RECOMMENDATIONS. TIGHTEN BANDS WITH A PROPERLY CALIBRATED TORQUE LIMITING DEVICE.

3. THE SYSTEM SHALL BE HYDROSTATICALLY TESTED AFTER INSTALLATION TO 10 FEET OF HEAD, OR AIR TEST TO 4.3 PSI.

B. INTERIOR ABOVEGROUND SOIL, WASTE, VENT AND STORM DRAIN PIPING:
1. 3" AND LARGER – HUBLESS CAST–IRON PIPE AND FITTINGS.
2. 2" AND SMALLER – HUBLESS CAST–IRON PIPE AND FITTINGS.
3. USING APPROVED LISTED ABS OR PVC IS ACCEPTABLE

C. INTERIOR DOMESTIC WATER PIPING:
3" AND SMALLER – TYPE L HARD TEMPERED COPPER WITH SOLDER END FITTINGS. 95–5 TIN AND ANTIMONY SOLDER JOINTING (LEAD–FREE). USE TYPE K FOR UNDERGROUND PIPING.

D. CONDENSATE DRAIN PIPING:
COPPER WATER TUBE ASTM B88, TYPE "M", SOLDER WITH 95–5 SOLDER, LEAD–FREE TYPE. CONDENSATE DRAIN PIPE IN CEILING SPACE SHALL BE INSULATED WITH 1/2" THICK ARMSTRONG ARMAFLEX, AND SECTIONS BUTTED FIRMLY TOGETHER.

E. GAS PIPING: GALVANIZED STEEL, ASTM–120, SCHEDULE 40 AND FITTINGS OR BLACK SCHEDULE 40.

F. THE FIRE–TEST RESPONSE CHARACTERISTIC OF ANY PIPING INSULATION SHALL HAVE A FLAME–SPREAD INDEX OF NOT MORE THAN 25 AND A SMOKE–DEVELOPED INDES OF NOT MORE THAN 50 WHEN TESTED IN ACCORDANCE WITH ASTM E 84 OR BY A TESTING AND INSPECTING AGENCY ACCEPTABLE TO AUTHORITIES HAVING JURISDICTION, OR REQUIRED BY LOCAL CODES.

G. DOMESTIC HOT WATER, TEMPERED WATER AND HOT WATER RETURN PIPING SHALL BE INSULATED WITH 1" THICK DENSITY GLASS FIBER INSULATION, HAVING FACTORY–APPLIED, SELF–SEALING ALL–SERVICE JACKET, MOLDED TO CONFORM TO PIPING, K–VALUE AT 75 DEGREES F, MAXIMUM 0.23 BTU–IN/HR–SQ.FT. DEGREES F.

2.02 PIPE FLASHINGS
#4 LEAD WITH COUNTERFLASHING RING BY GLENCO, STONEMAN ENGINEERING OR APPROVED EQUAL.

2.03 VALVES

A. GATE VALVES: RED & WHITE 204 OR EQUAL, 3" AND SMALLER.
B. CHECK VALVES: RED & WHITE 238 OR EQUAL, 3" AND SMALLER.
C. BALL VALVEES: BRASS OR BRONZE BODY WITH CHROME –PLATED BRONZE BALL, MSS SP–110, RED & WHITE VALVE 5044F OR EQUAL.

2.04 PLUMBING FIXTURES AND TRIM:

PLUMBING FIXTURES TO BE FURNISHED AND INSTALLED UNDER THIS CONTRACT. SEE PLUMBING FIXTURE SCHEDULE.

2.05 PIPE HANGERS AND SUPPORTS

A. SUPERSTRUT, GRINNELL, OR APPROVED EQUAL.
B. INSTALLATION PER MANUFACTURER'S RECOMMENDATIONS.
C. ALL HANGERS BELOW DECK TO BE STAINLESS STEAL. ALL BOLTS AND THREADED ROLS SHALL HAVE DOUBLE NUTS FOR LOCKING.

3.00 – INSTALLATION AND EXECUTION

3.01 GENERAL

A. SUPPORT C.I. SOIL PIPING AT 5 FEET ON CENTER MAXIMUM AND EACH JOINT AND/OR FITTING. SUPPORT 1/2" AND 3/4" PIPING AT 6 FEET ON CENTER MAXIMUM. SUPPORT 1" TO 1–1/2" PIPING AT 8 FEET ON CENTERS. SUPPORT 2" AND LARGER PIPING AT 10 FEET ON CENTER MAXIMUM. STEEL PIPING 4" AND LARGER MAY BE SUPPORTED AT 12 FEET ON CENTER MAXIMUM EXCEPT FOR VICTAULIC FITTED PIPING WHICH SHALL BE SUPPORTED AT 10 FEET ON CENTER MAXIMUM.

3.02 SPECIAL REQUIREMENTS, RESPONSIBILITIES AND TESTING

A. INSTALL PIPING GENERALLY LEVEL, FREE OF TRAPS AND UNNECESSARY BENDS, TO CONFORM WITH BUILDING REQUIREMENTS. PIPE TO BE FREE OF DEFECTS, AND INSTALLED TO AVOID ANY POSSIBLE GALVANIC ACTION BY ISOLATING DISSIMILAR METALS.

B. TEST AND RECORD AVAILABLE DOMESTIC WATER PRESSURE IN STATIC AND DYNAMIC CONDITIONS FOR DYNAMIC TESTING RECORD PRESSURE AND FLOW RATE IN GALLONS PER MINUTE. TRANSMIT THIS INFORMATION TO THE ENGINEER BEFORE PROCEEDING WITH THE WORK.

C. PROVIDE ALL TESTS SPECIFIED HEREINAFTER AND AS OTHERWISE REQUIRED. PROVIDE ALL TEST EQUIPMENT, INCLUDING TEST PUMPS, GAUGES, INSTRUMENTS AND OTHER EQUIPMENT REQUIRED. PRESSURE GAUGES USED SHALL BE GRADUATED IN INCREMENTS NOT GREATER THAN 5 POUNDS PER SQUARE INCH.. NO PLUMBING OR DRAINAGE SYSTEM OR PART THEREOF SHALL BE COVERED, CONCEALED, OR PUT INTO USE UNLESS IT HAS BEEN SPECIFIED. CONDUCT ALL TESTS IN THE PRESENCE OF THE OWNER'S REPRESENTATIVE, AND OBTAIN THE NECESSARY JURISDICTIONAL AUTHORITY INSPECTIONS.

D. APPLY A WATER TEST TO THE WASTE, AND VENT SYSTEMS WHETHER IN ITS ENTIRETY OR IN SECTIONS; IF APPLIED TO THE ENTIRE SYSTEM, TIGHTLY CLOSE ALL OPENINGS IN THE PIPING EXCEPT THE HIGHEST OPENING, AND FILL THE SYSTEM WITH WATER TO THE POINT OF OVERFLOW. IF THE SYSTEM IS TESTED IN SECTIONS, TIGHTLY PLUG EACH OPENING EXCEPT FOR THE HIGHEST OPENING OF THE SECTION UNDER TEST, AND FILL EACH SECTION WITH WATER, BUT TEST WITH NO LESS THAN A 10' HEAD OF WATER. IN TESTING SUCCESSIVE SECTIONS, TEST AT LEAST THE UPPER 10' OF THE NEXT PRECEDING SECTION SO THAT NO JOINT OR PIPE IN THE BUILDING (EXCEPT THE UPPERMOST 10' OF THE SYSTEM) SHALL HAVE BEEN SUBMITTED TO A TEST OF LESS THAN A 10' HEAD OF WATER. KEEP WATER IN THE SYSTEM OR IN THE PORTION UNDER TEST FOR AT LEAST 24 HOURS BEFORE INSPECTION STARTS, WITH THE SYSTEM TIGHT AT ALL POINTS.

E. DOMESTIC WATER SYSTEM SHALL BE TESTED AND PROVED TIGHT UNDER A PRESSURE OF NOT LESS THAN 150 PSI. PIPING MUST STAND THE TEST FOR A PERIOD OF 24 HOURS WITHOUT LEAKING.

F. CHLORINATION OF THE DOMESTIC COLD AND HOT WATER PIPING SYSTEMS IN ACCORDANCE WITH STANDARD TESTING PROCEDURES AND LOCAL HEALTH DEPARTMENT REQUIREMENTS. TESTING BY A FIRM SUCH AS BENNET–MARINE OR EQUAL. SUBMIT CERTIFICATE OF SATISFACTORY TEST RESULTS.

G. UPON COMPLETION OF TESTING, CERTIFY TO THE ARCHITECT, IN WRITING THAT THE SPECIFIED TESTS HAVE BEEN PERFORMED AND THAT THE INSTALLATION COMPLIES WITH THE SPECIFIED REQUIREMENTS.

H. GAS PIPING SYSTEM SHALL BE TESTED WITH 150 PSIG AIR FOR ONE HOUR.

3.03 PIPING INSTALLATION

A. MAKE CHANGES IN SIZE OF PIPE WITH REDUCING FITTINGS; BUSHINGS WILL NOT BE PERMITTED EXCEPT FOR BELL SHAPED COPPER BUSHINGS.

B. INSTALL DIELECTRIC INSULATING UNIONS IN WATER PIPING BETWEEN COPPER PIPING AND FERROUS PIPING OR EQUIPMENT – EPCO, OR EQUAL.

C. INSTALL EXPOSED POLISHED CHROME CONNECTIONS FROM FIXTURES OR EQUIPMENT WITH SPECIAL CARE. SHOW NO TOOL MARKS OR THREADS AT FITTINGS.

D. CAP OPENINGS IN PIPING DURING CONSTRUCTION.

E. PROVIDE 85% RED BRASS PIPE IPS, IN CONNECTION TO FAUCETS, FLUSH VALVES, HOSE BIBBS OR SIMILAR ITEMS REQUIRING RIGID PIPING. EXTEND BRASS PIPE FROM FIXTURE TO POINT WHERE PIPING CAN BE SECURELY FASTENED TO BUILDING CONSTRUCTION. ALL EXPOSED PIPING AND STOP VALVES IN CONNECTION TO FIXTURES SHALL BE CHROME PLATED BRASS.

F. INSTALL UNIONS ADJACENT TO VALVES AND WHERE NECESSARY TO FACILITATE DISASSEMBLY OF PIPING.

G. ESCUTCHEONS: FIT EXPOSED PIPES PASSING THROUGH FLOORS, WALLS OR CEILINGS WITH ESCUTCHEONS. MANUFACTURE SPECIAL SIZES OF ESCUTCHEONS FROM STEEL AND PRIME COAT SAME. CUT IN ROUND, RECTANGULAR OR SQUARE SPACE TO PROVIDE A CLEAN APPEARANCE ACCEPTABLE TO THE ARCHITECT.

H. SUPPORT PIPING INDEPENDENTLY OF EQUIPMENT TO WHICH IT IS CONNECTED.

I. MAKE COPPER SOLDER JOINTS WITH 95/5 SOLDER, OR SILFOS; CLEAN SURFACES TO BE JOINED FREE OF OIL, GREASE, RUST OR OXIDES AND APPLY FLUX TO EACH JOINT BEFORE HEATING ASSEMBLY.

J. ROUGH–IN AND MAKE FINAL CONNECTIONS TO ALL OTHER EQUIPMENT FURNISHED UNDER OTHER DIVISIONS, REQUIRING PLUMBING CONNECTIONS.

G K A ARCHITECTS

BUILDING ALTERATIONS

THOUSAND OAKS COMMUNITY CENTER
CHILDREN'S RESTROOM
2525 MOORPARK RD.,
THOUSAND OAKS, CA 91362

CLIENT: CONEJO RECREATION & PARK DISTRICT

Architect
G. Korn, AIA
GKA Architects
1301 N La Brea Ave
Inglewood, CA 90302
gkorn@gka-arc.com

A & N DESIGN GROUP
MECHANICAL · PLUMBING · ELECTRICAL
21550 OXNARD STREET #300
WOODLAND HILLS, CA 91367
TEL: (818)-288-4361
FAX: (818)-758-0087

No.	Description	Date

REGISTERED PROFESSIONAL ENGINEER
ARASH NAZARI
No. M–34638
EXP. 12–31–19
MECHANICAL
STATE OF CALIFORNIA

Project number	
Date	08.12.19
Drawn by	AN
Checked by	AN
Drawing Name	PLUMBING SPECIFICATIONS
Drawing No.	P-1.1
NOTE: DO NOT SCALE DRAWINGS Scale	AS SHOWN

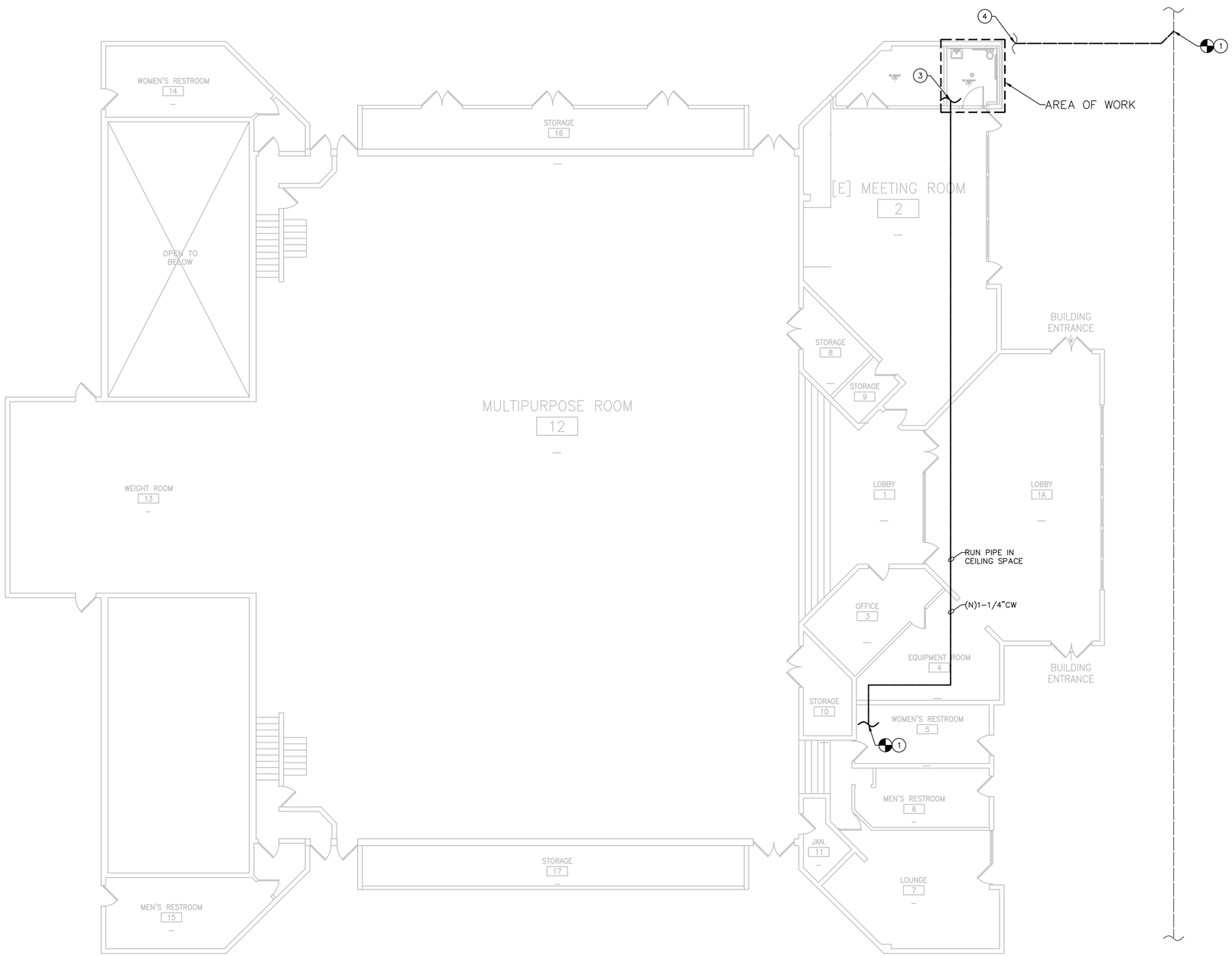

1 PLUMBING OVERALL FLOOR PLAN

SCALE: 1/8" = 1'-0"

GENERAL NOTES

1. V.I.F. EXACT LOCATION, INVERT ELEVATION AND SIZE OF ALL EXISTING PIPING.
2. THE CONTRACTOR SHALL, BEFORE SUBMITTING ANY PROPOSAL, EXAMINE THE SITE AND SHALL DETERMINE FOR HIMSELF THE CONDITIONS THAT MAY AFFECT THE WORK. NO ALLOWANCE SHALL BE MADE IF THE CONTRACTOR FAILS TO MAKE SUCH EXAMINATIONS.
3. PRIOR TO STARTING CONSTRUCTION, DETERMINE EXACT INVERT ELEVATION, SIZE, DIRECTION OF FLOW AND LOCATION OF EXISTING UTILITIES WHERE CONNECTIONS ARE TO BE MADE OR INTERSECTIONS OCCUR. NOTIFY ARCHITECT OR ENGINEER FOR DISCREPANCY BETWEEN DRAWINGS AND ACTUAL FIELD CONDITIONS. WORK BACK TOWARD BUILDING FROM UTILITY CONNECTION FOR ALL PIPING SYSTEMS.
4. ALL VALVES AND ACCES PANELS ARE NOT SHOWN ON THE CONTRACT DRAWINGS. PROVIDE VALVES AND ACCES PANELS WHERE REQUIRED TO ADEQUATELY SERVICE ALL PARTS OF SYSTEM AND EQUIPMENT IN ADDITION TO THOSE SHOWN ON THE DRAWINGS.
5. FOR FULL PIPE SIZING SEE ISOMETRIC PIPING DIAGRAMS

SHEET NOTES

1. 1-1/4" COLD WATER LINE TO BE CONNECTED INTO EXISTING 2" COLD WATER LINE. VERIFY IN FIELD EXACT LOCATION AND SIZE OF EXISTING COLD WATER LINE AND INFORM DESIGN TEAM IF ANY DISCREPANCY.
2. 4"WASTE LINE TO BE CONNECTED INTO EXISTING WASTE LINE. VERIFY IN FIELD EXACT LOCATION, SIZE AND INVERT ELEVATION OF EXISTING WASTE LINE.
3. FOR CONTINUATION SEE #1/P-2.1.
4. FOR CONTINUATION SEE #2/P-2.1.

G K A ARCHITECTS

BUILDING ALTERATIONS

THOUSAND OAKS COMMUNITY CENTER
CHILDREN'S RESTROOM
2525 MOORPARK RD.,
THOUSAND OAKS, CA 91362

CLIENT: CONEJO RECREATION & PARK DISTRICT

Architect
G. Korn, AIA
GKA Architects
1301 N La Brea Ave
Inglewood, CA 90302
gkorn@gka-arc.com

A & N DESIGN GROUP
MECHANICAL · PLUMBING · ELECTRICAL
21550 OXNARD STREET #300
WOODLAND HILLS, CA 91367
TEL: (818)-288-4361
FAX: (818)-758-0087

No.	Description	Date

REGISTERED PROFESSIONAL ENGINEER
ARASH NAZARI
No. M-34638
EXP. 12-31-19
MECHANICAL
STATE OF CALIFORNIA

Project number	
Date	08.12.19
Drawn by	AN
Checked by	AN
Drawing Name	PLUMBING OVERALL PLAN
Drawing No.	P-2.0
NOTE: DO NOT SCALE DRAWINGS Scale	AS SHOWN

GENERAL NOTES

1. V.I.F. EXACT LOCATION, INVERT ELEVATION AND SIZE OF ALL EXISTING PIPING.
2. THE CONTRACTOR SHALL, BEFORE SUBMITTING ANY PROPOSAL, EXAMINE THE SITE AND SHALL DETERMINE FOR HIMSELF THE CONDITIONS THAT MAY AFFECT THE WORK. NO ALLOWANCE SHALL BE MADE IF THE CONTRACTOR FAILS TO MAKE SUCH EXAMINATIONS.
3. PRIOR TO STARTING CONSTRUCTION, DETERMINE EXACT INVERT ELEVATION, SIZE, DIRECTION OF FLOW AND LOCATION OF EXISTING UTILITIES WHERE CONNECTIONS ARE TO BE MADE OR INTERSECTIONS OCCUR. NOTIFY ARCHITECT OR ENGINEER FOR DISCREPANCY BETWEEN DRAWINGS AND ACTUAL FIELD CONDITIONS. WORK BACK TOWARD BUILDING FROM UTILITY CONNECTION FOR ALL PIPING SYSTEMS.
4. ALL VALVES AND ACCES PANELS ARE NOT SHOWN ON THE CONTRACT DRAWINGS. PROVIDE VALVES AND ACCES PANELS WHERE REQUIRED TO ADEQUATELY SERVICE ALL PARTS OF SYSTEM AND EQUIPMENT IN ADDITION TO THOSE SHOWN ON THE DRAWINGS.
5. FOR FULL PIPE SIZING SEE ISOMETRIC PIPING DIAGRAMS

SHEET NOTES

1. FOR CONTINUATION SEE #1/P-2.0.
2. 1-1/4"CW DOWN.
3. 1/2"CW DOWN.
4. INSTALL INSTANTANEOUS ELECTRIC WATER HEATER AT ACCESSIBLE LOCATION BELOW LAVATORY.
5. 2"W DOWN AND 2"V UP.
6. 3"W DOWN AND 2"V UP.
7. 2"VENT UP THROUGH ROOF.
8. PROVIDE HAND DRYER. SLOAN, MODEL #EHD-502-BN-HEPA. TO BE INSTALLED AND POWERED BY ELECTRICAL CONTRACTOR. VERIFY EXACT LOCATION WITH ARCHITECT.
9. PROVIDE SLOAN EL-154 TRANSFORMER FOR FLUSHOMETER. 120 VAC INPUT / 24 VAC OUTPUT. TO BE INSTALLED AND POWERED BY ELECTRICAL CONTRACTOR. VERIFY EXACT LOCATION WITH ARCHITECT.
10. 1/2" COLD WATER DOWN TO TRAP PRIMER FOR FLOOR DRAIN. PROVIDE 10"X10" ACCESS PANEL FOR TRAP-PRIMING DEVICE. INSTALL TRAP PRIMING VALVE AT LEAST 12" ABOVE FINISHED FLOOR WITH BALL VALVE

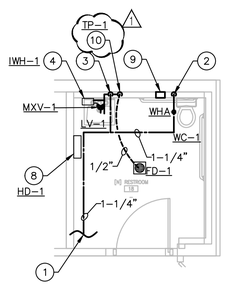

1 DOMESTIC WATER PLUMBING FLOOR PLAN
SCALE: 1/4" = 1'-0"

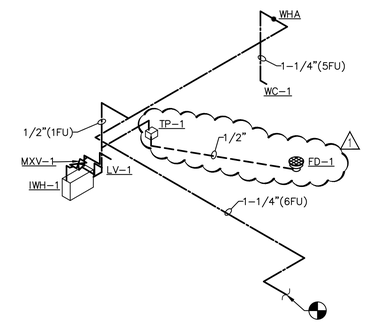

3 DOMESTIC WATER ISOMETRIC PIPING DIAGRAM
SCALE: N.T.S.

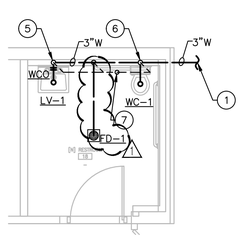

1 SANITARY WASTE & VENT PLUMBING FLOOR PLAN
SCALE: 1/4" = 1'-0"

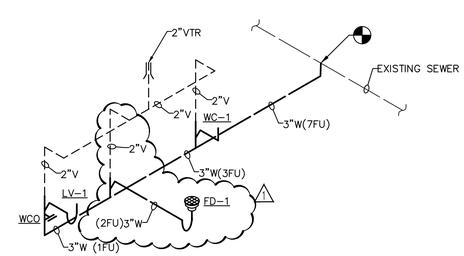

4 SANITARY WASTE & VENT ISOMETRIC PIPING DIAGRAM
SCALE: N.T.S.

GKA ARCHITECTS

BUILDING ALTERATIONS

THOUSAND OAKS COMMUNITY CENTER
CHILDREN'S RESTROOM
2525 MOORPARK RD.,
THOUSAND OAKS, CA 91362

CLIENT: CONEJO RECREATION & PARK DISTRICT

Architect
G. Korn, AIA
GKA Architects
1301 N La Brea Ave
Inglewood, CA 90302
gkorn@gka-arc.com

A & N DESIGN GROUP
MECHANICAL • PLUMBING • ELECTRICAL
21550 OXNARD STREET #300
WOODLAND HILLS, CA 91367
TEL: (818)-288-4361
FAX: (818)-758-0087

No.	Description	Date

REGISTERED PROFESSIONAL ENGINEER ARASH NAZARI No. M-34638 EXP. 12-31-19 MECHANICAL STATE OF CALIFORNIA

Project number	
Date	08.12.19
Drawn by	AN
Checked by	AN

Drawing Name
PLUMBING ENLARGED PLAN

Drawing No.
P-2.1

NOTE: DO NOT SCALE DRAWINGS
Scale AS SHOWN

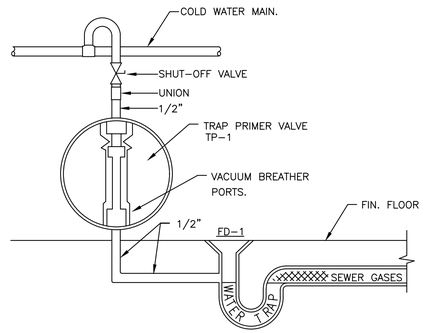

TRAP PRIMER DETAIL | N.T.S. | 7

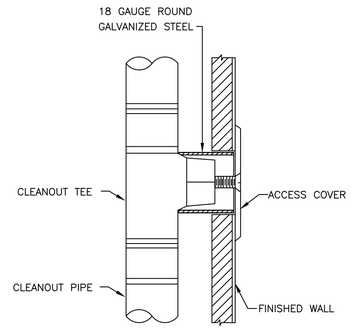

WALL CLEANOUT

WALL CLEANOUT DETAIL | N.T.S. | 4

TYPICAL PIPE HANGERS

MAXIMUM PIPE/TUBING SUPPORT SPACING, FEET								
NOM. SIZE	THRU 1"	1	11/4	11/2	2	21/2	3	4
PIPE	7 FT	7	7	9	10	11	12	14
TUBING	5 FT	6	7	8	8	9	10	12
NOTE: FOR TRAPEZE HANGER TAKE SPACING OF SMALLEST SIZE ON TRAPEZE.								

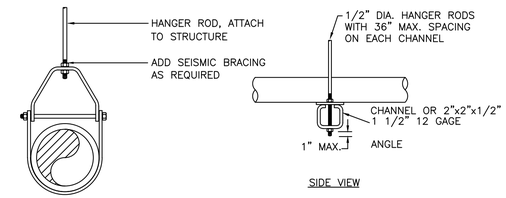

ADJUSTABLE CLEVIS HANGER
TYPE 1 IN SPECIFICATIONS

TRAPEZE HANGER FOR UP
TO 1000 LB. UNIFORM LOAD

PIPE HANGER DETAIL | N.T.S. | 1

NOT USED | N.T.S. | 8

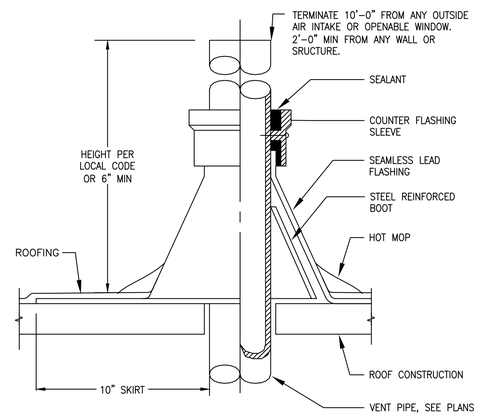

VENT THRU ROOF DETAIL | N.T.S. | 5

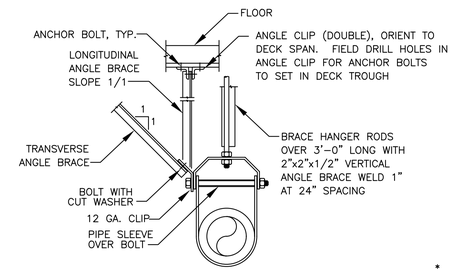

PIPE SIZE	ANGLE BRACE *	BOLT TO ANGLE	ANGLE CLIP **	ANCHOR BOLTS OR INSERTS***
2"	2"x2" 16 GA.	1/2"	3"x3"x1/2"x1'-4"	1/2
3, 4	2"x2" 16 GA.	1/2"	3"x3"x1/2"x1'-4"	1/2
5, 6	2.5"x2.5" 16 GA.	1/2"	5"x3"x1/2"x1'-4"	1/2
8	3"x3" 12 GA.	1/2"	2-5x3x1/2x1'-4"	2
10	3"x3" 12 GA.	1"	2-5x3x1/2"x1'-4"	2

* 2"x 2"x12 GA. CHANNEL MAY BE USED

** BENT PLATE OF EQUAL THICKNESS MAY BE SUBSTITUTED FOR LONGITUDINAL ANGLE CLIP TO FACILITATE ANCHORAGE TO SLAB TROUGHS. PROVIDE EQUAL NUMBER OF ANCHOR BOLTS TO THAT SHOWN.

*** PROVIDE MINIMUM EMBEDMENT OF 1 1/2" ABOVE TOP OF METAL DECK FOR ALL ANCHOR BOLTS.

PIPE SUPPORT DETAIL | N.T.S. | 2

NOT USED | N.T.S. | 9

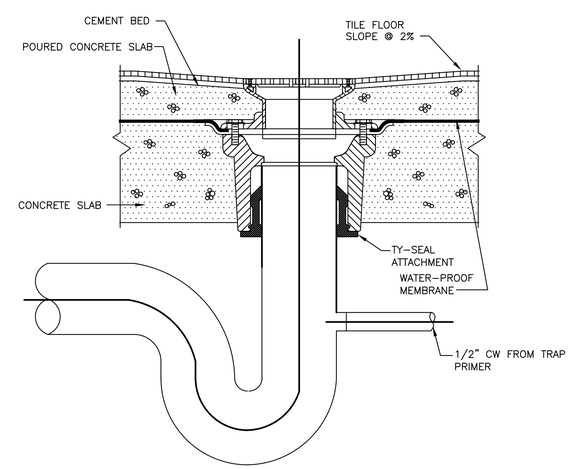

FLOOR DRAIN DETAIL | N.T.S. | 6

NOTE: WHERE PIPING IS EXPOSED AT FINISHED WALLS, FLUSH MOUNT SLEEVE AND PROVIDE ESCUTCHEON PLATE.

NOTES:

1. TYP FOR NON-INSULATED PIPE
2. TYP FOR MASONRY OR CONCRETE WALL

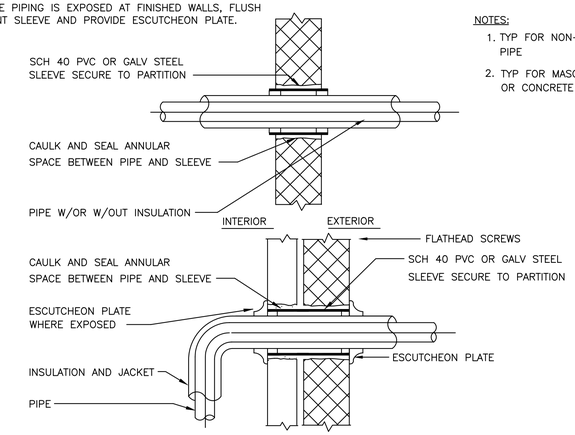

PIPE PENETRATION THRU WALLS DETAIL | N.T.S. | 3

GKA ARCHITECTS

BUILDING ALTERATIONS

THOUSAND OAKS COMMUNITY CENTER
CHILDREN'S RESTROOM
2525 MOORPARK RD.,
THOUSAND OAKS, CA 91362

CLIENT: CONEJO RECREATION
& PARK DISTRICT

Architect
G. Korn, AIA
GKA Architects
1301 N La Brea Ave
Inglewood, CA 90302
gkorn@gka-arc.com

A & N DESIGN GROUP
MECHANICAL · PLUMBING · ELECTRICAL
21550 OXNARD STREET #300
WOODLAND HILLS, CA 91367
TEL: (818)-288-4361
FAX: (818)-758-0087

No.	Description	Date

REGISTERED PROFESSIONAL ENGINEER ARASH NAZARI No. M-34638 EXP. 12-31-19 MECHANICAL STATE OF CALIFORNIA

Project number	
Date	08.12.19
Drawn by	AN
Checked by	AN
Drawing Name	PLUMBING DETAILS
Drawing No.	P-3.0
NOTE: DO NOT SCALE DRAWING Scale	AS SHOWN
	Page 5 /5

OPTIONS

Flush Volume

- ☐ 1.6 gpf (6.0 Lpf) (1.6)
- ☐ 1.28 gpf (4.8 Lpf) (1.28)

Finish

- ☐ Polished Chrome (CP)
- ☐ Polished Brass (PB)
- ☐ Brushed Nickel (BN)
- ☐ Brushed Stainless (SF)
- ☐ Graphite (GR)

Water Efficiency

- ☐ Low Consumption
- ☐ High Efficiency

Handle

- ☐ Front of Valve (H)
- ☐ Sanigard® (SG)
- ☐ Left of Valve (G)
- ☐ Nickel-Silver (YA)
- ☐ Right of Valve (I)

Push Button

- ☐ 3" Metal Oscillating (L3)
- ☐ Metal Index (L)
- ☐ Front of Valve (HL3)

Control Stop

- ☐ 1" Straight (E)
- ☐ Wheel Handle (K)
- ☐ Ground Joint (GJ)
- ☐ Less (L/STOP)

Tailpiece

- ☐ H551A 3 1/16" (H551A-3-1/16)
- ☐ H551A 4 1/16" (H551A-4-1/16)
- ☐ H551A 5 1/16" (H551A-5-1/16)

Inlet

- ☐ Back of Valve (B)
- ☐ Left of Valve (C)

Vacuum Breaker

- ☐ Less (XYV)

Offset

- ☐ 1 ½" (38mm) (1-1/2-OFST)
- ☐ 1" (25mm) (1-OFST)

Outlet Tube

- ☐ Trap Primer (TP)

Image for a standard ROYAL 111 shown

DESCRIPTION

Royal® Exposed Manual Water Closet Flushometer

FEATURES

- Water conservation is aided by the ADA-compliant, non-hold-open handle, which prevents toilet from exceeding intended flush volume
- Flush accuracy is controlled by CID™ technology, also enhancing water efficiency
- Integrity of the product is maintained with the vandal-resistant stop cap
- Durability is facilitated with high copper, low zinc brass castings for dezincification resistance
- Adjustable tailpiece
- PERMEX synthetic rubber diaphragm with Dual Filtered Fixed Bypass
- Valve body, Cover, Tailpiece and Control Stop shall be in compliance with ASTM Alloy Classification for Semi-Red Brass
- Valve shall be in compliance to the applicable sections of ASSE 1037.

DOWNLOADS

- Royal Exposed Installation Instructions
- Control Stop Repair and Maintenance Guide
- Flush Connections Flanges Repair and Maintenance Guide
- Tail Piece Repair and Maintenance Guide
- Royal Flushometers Repair and Maintenance Guide
- Flushometer Pressure gauges
- Additional Downloads

Sloan 10500 Seymour Ave, Franklin Park, IL 60131
Phone: 800.982.5839 • Fax: 800.447.8329 • sloan.com

- ☐ F189 (F189)
- ☐ F188 (F188)

Bumper

- ☐ Angle Stop (YO)
- ☐ Angle Stop Extended (YG)

Pipe Support

- ☐ Solid Ring (YK)

Special Features

- ☐ Less Logo (LL)
- ☐ Carbon Offset (CO)
- ☐ Whitworth Thread (WWT)

Compliances & Certifications

- ☐ BAA Compliant
- ☐ cUPC Certified
- ☐ ADA Compliant
- ☐ Satisfies LEED Credits
- ☐ WaterSense Listed
- ☐ cUPC Green Certified
- ☐ BREEAM Water Credit
- ☐ Green Globes Water Credit
- ☐ LEED V4 Water Efficiency Credit
- ☐ LEED Materials & Resources EPD Credit

NOTES

For product line drawings, view model-specific spec sheets.

All information contained within this document subject to change without notice.

VIDEOS

PVD Special Finishes

Sloan 10500 Seymour Ave, Franklin Park, IL 60131
Phone: 800.982.5839 • Fax: 800.447.8329 • sloan.com

GENERAL NOTES

1. CONTRACTOR SHALL PERFORM ALL WORK IN ACCORDANCE WITH THE CALIFORNIA ELECTRICAL CODE INCLUSIVE OF CITY OF REDONDO BEACH AMENDMENTS, PERTINENT NFPA CODES AS WELL AS ALL RULES AND REGULATIONS OF LOCAL, STATE AND, FEDERAL AUTHORITIES HAVING JURISDICTION.
2. THE DRAWINGS SHALL BE READ IN CONJUNCTION WITH THE MAIN CONTRACT CONDITIONS, ELECTRICAL SPECIFICATIONS (DIVISION 26), THE MECHANICAL, PLUMBING AND FIRE PROTECTION DRAWINGS, THE ARCHITECTURAL DRAWINGS, THE STRUCTURAL ENGINEER'S DRAWINGS, THE TELECOMMUNICATIONS, AUDIO VISUAL AND SECURITY DRAWINGS (DIVISION 27 AND 28).
3. CONTRACTOR SHALL EXECUTE THE WORK IN THE BEST AND MOST THOROUGH MANNER & TO THE SATISFACTION OF THE CONSULTING ENGINEER, WHO WILL INTERPRET THE MEANING OF THE DRAWINGS AND SPECIFICATIONS AND SHALL HAVE THE POWER TO REJECT ANY WORK AND MATERIALS WHICH, IN THEIR JUDGMENT, ARE NOT IN FULL ACCORDANCE THEREWITH.
4. THE DRAWINGS SHOW THE VARIOUS CONDUIT AND PIPING SYSTEMS SCHEMATICALLY. CONTRACTOR SHALL FURNISH AND INSTALL ALL NECESSARY JUNCTION BOXES, PULL BOXES, SUPPORT AND ACCESSORIES TO MEET APPLICABLE CODES, BUILDING STANDARDS AND FULFILL CONTRACT DOCUMENTS. NO ADDED COMPENSATION WILL BE PERMITTED FOR VARIATIONS DUE TO FIELD CONDITIONS.
5. DO NOT SCALE FROM THE DRAWINGS, IF IN DOUBT, REQUEST FURTHER INFORMATION.
6. REFER TO THE ARCHITECTURAL DRAWINGS FOR SETTING OUT AND MOUNTING HEIGHT DETAILS OF ALL DEVICES, SWITCHES, ETC.
7. REFER TO THE ARCHITECTURAL REFLECTED CEILING PLANS FOR THE SETTING OUT OF ALL CEILING MOUNTED COMPONENTS.
8. ALL AREAS ASSOCIATED WITH WORK TO BE PERFORMED SHALL BE EXAMINED PRIOR TO BID SUBMISSION. NO ADDITIONAL COMPENSATION SHALL BE MADE FOR CONDITIONS FOUND DURING INSTALLATION.
9. CONTRACTOR SHALL INCLUDE ALL LABOR, MATERIALS, AND APPURTENANCES REQUIRED FOR THE INSTALLATION AND TESTING OF ALL EQUIPMENT AND APPLIANCES INDICATED IN THESE DOCUMENTS. CONTRACTOR SHALL COMPLETE ALL WORK AND VERIFY THE OPERATION OF ALL EQUIPMENT IN A MANNER SATISFACTORY TO THE ARCHITECT AND ELECTRICAL CONSULTING ENGINEER.
10. WHERE CONDUIT, CABLE, CABLE TRAY OR OTHER ELECTRICAL EQUIPMENT SUCH AS CUTOUT BOXES, LUMINARIES OR PANELBOARDS, PENETRATE RATED ASSEMBLIES, FIRE BARRIERS, FIRE WALLS, FIRE PARTITIONS, SMOKE BARRIERS, OR SMOKE PARTITIONS, THE ELECTRICAL CONTRACTOR SHALL PROVIDE AN APPROPRIATE FIRE OR SMOKE STOPPING SYSTEM THAT IS LISTED BY UNDERWRITERS LABORATORIES OR COMPLIES WITH THE APPROPRIATE ICC EVALUATION REPORT AND DOES NOT REDUCE THE RATING OF THE ASSEMBLY. ALL THROUGH AND MEMBRANE PENETRATIONS SHALL BE SUBMITTED TO THE ARCHITECT OF RECORD FOR APPROVAL PRIOR TO INSTALLATION. ALL ACCESS PANELS SHALL BE APPROVED AND LISTED FOR THE ASSEMBLY IN WHICH THEY ARE BEING INSTALLED. COMPLY WITH ALL REQUIREMENTS OF DIVISION 26 SPECIFICATIONS. SEE ARCHITECTURAL DRAWINGS FOR RATINGS OF ALL ASSEMBLIES. CONTRACTOR SHALL COORDINATE THIS WORK WITH THE GENERAL CONTRACTOR PRIOR TO INSTALLATION.
11. CONDUIT RUNS INDICATED ON PLAN ARE FOR REFERENCE ONLY. EXACT LOCATIONS AND ELEVATIONS SHALL BE DETERMINED AFTER COORDINATING WITH OTHER TRADES AND THE GENERAL CONTRACTOR. THE CONTRACTOR SHALL SUPPLY, AS PART OF THEIR SHOP DRAWING SUBMISSION, THE EXACT LOCATION OF ALL CEILING MOUNTED EQUIPMENT AND CONDUIT RUNS, INCLUDING THE PROPOSED LOCATIONS AND THE MEANS OF SUPPORT. PROVIDE THE ARCHITECT AND STRUCTURAL ENGINEER THE ANTICIPATED LOAD AT THE POINTS OF ATTACHMENT PRIOR TO COMMENCEMENT OF WORK.
12. CONTRACTOR SHALL VERIFY THE ELECTRICAL REQUIREMENTS OF ALL NEW EQUIPMENT TO BE USED. ALL SPECIAL PURPOSE OUTLETS INDICATED ON PLAN SHALL BE VERIFIED WITH THE EQUIPMENT MANUFACTURER AND OWNER PRIOR TO INSTALLATION. THE ELECTRICAL CONTRACTOR SHALL ENSURE PROPER WIRING AND COMPATIBILITY WITH ATTACHMENT PLUGS OR JUNCTION BOXES THAT MAY BE FURNISHED AS AN INTEGRAL PART OF THE EQUIPMENT.
13. ALL RECEPTACLES SHALL BE ACCESSIBLE. CONTRACTOR SHALL COORDINATE EXACT LOCATION OF EQUIPMENT RECEPTACLES WITH THE EQUIPMENT MANUFACTURER'S REQUIREMENTS, THE OWNER, AND THE AUTHORITY HAVING JURISDICTION.
14. CONTRACTOR SHALL PROVIDE DISCONNECTS FOR ALL EQUIPMENT AS REQUIRED BY THESE DOCUMENTS AND THE ADOPTED CODES. COORDINATE ALL REQUIREMENTS AND LOCATIONS WITH THE AUTHORITY HAVING JURISDICTION, THE VENDORS APPROVED SHOP DRAWINGS AND FINAL EQUIPMENT LOCATIONS.
15. CONTRACTOR SHALL COORDINATE ALL LOCATIONS AND HEIGHTS OF STUB-UPS AND STUB-OUTS AS WELL AS ALL OUTLETS IN FIELD.
16. FINAL CONNECTIONS TO EQUIPMENT SHALL BE MADE ACCORDING TO VENDOR'S APPROVED SHOP DRAWINGS AND THE LISTING OF THE EQUIPMENT.
17. ALL WORK AND/OR EQUIPMENT INSTALLED OUTDOORS SHALL BE APPROVED FOR USE IN WET LOCATIONS.
18. ALL PARTS OF THE WORK AND ASSOCIATED EQUIPMENT SHALL BE TESTED AND ADJUSTED TO WORK PROPERLY AND BE IN PERFECT OPERATING CONDITION. THIS SHALL INCLUDE MEG-OHM TESTING BETWEEN PHASES, BETWEEN EACH PHASE AND THE GROUNDED CONDUCTOR, AND EACH PHASE AND THE EQUIPMENT GROUND FOR ALL FEEDERS, TAPS, SECONDARY CONDUCTORS , SWITCHBOARDS AND PANELBOARDS. FURNISH ALL TEST RESULTS TO THE ELECTRICAL CONSULTING ENGINEER FOR REVIEW PRIOR TO ENERGIZING EQUIPMENT. THE ELECTRICAL CONTRACTOR SHALL CORRECT ANY DEFECTS IDENTIFIED THOUGH THIS TESTING.
19. PROVIDE ISOLATED GROUND TYPE OUTLETS WHERE THE "IG" SUBSCRIPT IS INDICATED.
20. WALL-MOUNTED OUTLETS, SWITCHES, AND CONTROL DEVICES, SHOULD BE MOUNTED AT THE HEIGHTS INDICATED IN THESE DOCUMENTS. THE ELECTRICAL CONTRACTOR SHALL VERIFY AND FULLY COMPLY WITH, ALL AMERICANS WITH DISABILITIES REQUIREMENTS AND MEET ALL REQUIREMENTS ESTABLISHED BY THE HOUSING AND URBAN DEVELOPMENT (HUD) STANDARDS AS REQUIRED BY THE AUTHORITY HAVING JURISDICTION.
21. ALL ELECTRICAL EQUIPMENT SHALL BE LISTED BY A CITY OF REDONDO BEACH RECOGNIZED ELECTRICAL TESTING LABORATORY OR APPROVED BY THE CITY OF LOS ANGELES, DEPARTMENT OF BUILDING AND SAFETY.
22. NO PIPING, DUCTS OR EQUIPMENT FOREIGN TO ELECTRICAL EQUIPMENT SHALL BE PERMITTED TO BE LOCATED WITHIN THE DEDICATED SPACE MANDATED BY THE CALIFORNIA ELECTRICAL CODE ABOVE OR BELOW ELECTRICAL EQUIPMENT.
23. ADEQUATE CLEARANCE AROUND AND ABOVE ELECTRICAL EQUIPMENT SHALL BE MAINTAINED PER CALIFORNIA ELECTRICAL CODE SECTION 110.26.
24. ALL GROUNDING ELECTRODES THAT ARE PRESENT AT EACH BUILDING AND STRUCTURE, INCLUDING THE PHOTOVOLTAIC SYSTEM, SHALL BE BONDED TOGETHER.
25. ALL WORK TO COMPLY WITH 2016 C.E.C. AND 2016 ENERGY EFFICIENCY STANDARDS.
26. EACH MULTIWIRE BRANCH CIRCUIT SHALL BE PROVIDED WITH A MEANS THAT WILL SIMULTANEOUSLY DISCONNECT ALL UNDERGROUND CONDUCTORS AT THE POINT OF DISTRIBUTION PER C.E.C. 210.4 [B].
27. G.F.C.I. PROTECTION REQUIRED FOR APPLIANCES IN DEDICATED SPACES AND RECEPTACLES NOT READILY ACCESSIBLE PER C.E.C. 210.8 [A].
28. G.F.C.I. PROTECTION IS REQUIRED FOR ALL 125 VOLT, SINGLE PHASE 15 AND 20 AMP RECEPTACLES INSTALLED IN BATHROOMS, KITCHENS, ROOFTOPS, OUTDOORS AND WITHIN 6-FEET OF SINKS AS PER C.E.C. 210.8 [B].
29. 125V, 15 AND 20 AMP RECEPTACLES ARE REQUIRED, PER C.E.C. 210.52, TO BE LISTED AS TAMPER RESISTANT.
30. PROVIDE CARBON MONOXIDE ALARMS IN DWELLING UNITS WHERE FUEL BURNING APPLIANCES ARE INSTALLED AND/OR IN DWELLING UNITS WITH ATTACHED GARAGES PER C.B.C. 420.4.
31. PROVIDE "ARC-FLASH" LABELING ON SWITCHBOARDS, DISTRIBUTION BOARDS AND PANELBOARDS.
32. UPON COMPLETION OF THIS PROJECT, PROVIDE THE PROJECT OWNER WITH AN APPROVED COPY OF THE CERTIFICATE OF OCCUPANCY AND OR A COPY OF THE FINAL APPROVAL OF THE ELECTRICAL SYSTEM.

CONDUIT AND CIRCUIT WIRING NOTES

1. ALL CONDUIT AND CABLE "HOME RUNS" SHALL CONSIST OF A SINGLE CIRCUIT PER CONDUIT FOR THREE PHASE CIRCUITS, AND SINGLE PHASE CIRCUITS SERVED BY AN OVERCURRENT PROTECTIVE DEVICE (OCPD) IN EXCESS OF 20 AMPERES SINGLE POLE.
2. WHERE WIRE AND CONDUIT BRANCH CIRCUITS SHARE A CONDUIT HOME RUN, (OCPD LESS THAN OR EQUAL TO 20 AMPERES SINGLE POLE) THERE SHALL BE A MAXIMUM OF THREE CIRCUITS COMBINED IN A SINGLE RACEWAY TO THE PANELBOARD, UNLESS OTHERWISE NOTED. ALL CONDUCTORS SHALL BE DE-RATED PER CALIFORNIA ELECTRICAL CODE. COMBINING OF MULTIPLE HOME RUNS (MORE THAN THREE) IN A SINGLE CONDUIT IS NOT PERMITTED. WITH THE EXCEPTION OF FURNITURE FEED TYPE WIRING SYSTEMS THE SHARING OF NEUTRALS AND GROUNDING CONDUCTORS BETWEEN CIRCUITS IS NOT PERMITTED.
3. CONTRACTOR SHALL VERIFY PHASE LOAD BALANCING ON POWER PANELS UPON COMPLETION OF THE ELECTRICAL INSTALLATION. INCLUDE RE-DISTRIBUTION OF CIRCUITS WITHIN PANELS TO BALANCE WITHIN A 10% WINDOW (±5%).
4. UNLESS OTHERWISE NOTED ALL BRANCH CIRCUITS SHALL BE 20-AMPERE DEDICATED CIRCUITS WITH 3/4"C, #12, #12N, #12G MINIMUM.
5. ALL CIRCUITS TO HAVE BOTH CONDUCTORS AND GROUND WIRE HOME RUN TO SERVICE PANEL.
6. ALL FEEDER AND BRANCH CIRCUIT WIRING SHALL BE A MINIMUM SIZE OF AWG #12. METAL CLAD (MC) CABLING IS PERMITTED
7. RIGID STEEL CONDUITS:
   - 7.1. USE FOR ALL SIZES WHERE DIRECTLY EXPOSED TO WEATHER; WHERE SUBJECT TO ABNORMAL CONDITIONS OF HEAT, COLD, MOISTURE, HUMIDITY, FUMES AND HAZARDOUS ELEMENTS; WHERE INSTALLED EXPOSED BELOW 7-1/2', IN AREAS WHERE SUBJECT TO MECHANICAL INJURY. USE FOR ALL CONDUIT IN ALL ELECTRICAL AND MECHANICAL EQUIPMENT ROOMS; FOR LOW VOLTAGE (UP TO 600 VOLTS) FEEDERS INSIDE OF BUILDING AND IN CONCRETE SLABS ON GRADE.
   - 7.2. FOR ALL BENDS IN CONDUITS 3” AND LARGER, AND OVER 50' IN LENGHT, USE LARGE RADIUS FACTORY MADE BENDS OR FIELD FABRICATE WITH A POWER BENDER.
8. ELECTRICAL METALLIC TUBING (EMT)
   - 8.1. PERMITTED TO BE USED IN WET LOCATIONS WITH APPROVED FITTINGS.
   - 8.2. CONDUITS SHALL BE CONTINUOUS. CONDUCTORS SHALL NOT BE INSTALLED UNTIL THE RACEWAY SYSTEM IS COMPLETE.
9. RIGID PLASTIC CONDUITS:
   - 9.1. ALL CONDUITS INSTALLED UNDERGROUND, OR ENCASED IN CONCRETE, SHALL BE SCHEDULE 40 PVC CONDUIT.
   - 9.2. MAKE ALL FITTINGS IN PLASTIC CONDUITS WATERTIGHT WITH APPROVED SOLVENT-WELD CEMENT SPECIFICALLY MANUFACTURED FOR THE PURPOSE. APPLY HEAT FOR BENDS SO THAT CONDUIT DOES NOT DISTORT OR DISCOLOR.
10. PVC JACKETED STEEL CONDUITS:
    - 10.1. USE FOR ALL SIZES IN SOIL BELOW THE BUILDING.
    - 10.2. FOR ALL BENDS IN CONDUITS 1-1/4” AND LARGER, USE LARGE RADIUS FACTORY MADE BENDS OR FIELD FABRICATE WITH A POWER BENDER.

RELEVANT CODE CYCLES

2014 NEC
2016 CEC
2017 CAEC
2016 TITLE 24 PART 6

GENERAL SYMBOLS

SYMBOL	DESCRIPTION
(X)	KEYNOTE IDENTIFIER X - KEYNOTE NUMBER
△ X	REVISION CHANGE X - DELTA NUMBER
X / EXXX	DETAIL/ENLARGED PLAN CALLOUT X - DETAIL/REFERENCE# EXXX - SHEET #
X / EXXX	SECTION IDENTIFIER X - SECTION # EXXX - SHEET #

EQUIPMENT POWER

a. b. KVA c. V d. P e. W f.	EQUIPMENT CALLOUT a. EQUIPMENT DESIGNATION b. EQUIPMENT LOADING IN KVA OR HP c. EQUIPMENT UTILIZATION VOLTAGE d. NUMBER OF POLES e. NUMBER OF WIRES f. RELEVANT NOTES
--A --P	(--A) - DENOTES CONTINUOUS CURRENT RATING IN AMPS (--P) - DENOTES NUMBER OF SWITCHED POLES
⊗⌒	HARD WIRED CONNECTION TO FIXED EQUIPMENT OR PACKAGED UNIT (NON-MOTOR)
○⌒	HARD WIRED CONNECTION TO MOTORIZED EQUIPMENT (MOTOR / FAN / PUMP / FAN COIL UNIT)
☐ 30A 2P	UL LISTED DISCONNECT (UNFUSED): APPROVED FOR MOTOR USE AS APPLICABLE MATCH VOLTAGE AND POLES TO EQUIPMENT 30A, 2 POLES, NEMA 1 U.O.N.
◪ 30AS/30AF	UL LISTED DISCONNECT (FUSED): APPROVED FOR MOTOR USE AS APPLICABLE --AS - DENOTES SWITCH RATING IN AMPS --AF - DENOTES FUSE SIZE IN AMPS MATCH VOLTAGE AND POLES TO EQUIPMENT. NEMA 1 U.O.N
☒ 3R	PRE-WIRED UL LISTED MOTOR CONTROLLER (FURNISHED BY DIV 21, 22 AND 23 U.O.N) COMPLETE WITH INTEGRAL OVERLOAD PROTECTIVE DEVICE. 3R INDICATES NEMA SIZE, NEMA 1 U.O.N.
☒ 3R	PRE-WIRED CONTROL PANEL (FURNISHED BY DIV 21, 22 AND 23 U.O.N.) COMPLETE WITH INTEGRAL DISCONNECT AND OVERLOAD PROTECTIVE DEVICES. 3R INDICATES NEMA SIZE, NEMA 1 U.O.N.
VFD 3R	UL LISTED VARIABLE FREQUENCY DRIVE (FURNISHED BY DIV 21, 22 AND 23 U.O.N.) COMPLETE WITH INTEGRAL DISCONNECT AND OVERLOAD PROTECTIVE DEVICES. 3R INDICATES NEMA SIZE, NEMA 1 U.O.N.
⊗~$	HARD WIRED CONNECTION TO FIXED EQUIPMENT OR PACKAGED UNIT (NON-MOTOR) WITH TOGGLE SWITCH
○~$	SINGLE PHASE MANUAL STARTER WITH OVERLOAD PROTECTION FOR FRACTIONAL HORSEPOWER MOTORS
--A/--P CB	CIRCUIT BREAKER IN NEMA TYPE 1 ENCLOSURE: --A - DENOTES TRIP SETTING --P - DENOTES POLES
L-1A P-1A Q-1A	PANEL BOARD L - DENOTES LIGHTING AND MISCELLANEOUS 277V LOADS P - DENOTES POWER AND 120/208V LOADS Q - DENOTES EQUIPMENT AND/OR EXTERNAL SUPPLIES
▭	DRY TYPE ENERGY EFFICIENT TRANSFORMER PER SPECIFICATION: 30kVA AND LARGER SHALL BE FLOOR STANDING U.O.N. 115°C TEMPERATURE RISE U.O.N. AS 80°C ON SHEET E6.1 VOLTAGES AND kVA RATING - AS PER SHEET E6.1 K-RATING - STANDARD U.O.N. ON SHEET E6.1

SINGLE LINE DIAGRAM

Ⓐ	AMP METER
Ⓥ	VOLT METER
ATS #A	2P, 3W, AUTOMATIC TRANSFER SWITCH - #A DENOTES RATING
PB	PULL BOX SIZE PER CEC
G	GROUND FAULT TRIP UNIT
	TRANSFORMER WITH SECONDARY GROUND (SEE TRANSFORMER SCHEDULE)
--AS/--AF	SWITCH AND FUSE UNIT: --AS - DENOTES SWITCH RATING IN AMPS --AF - DENOTES FUSE SIZE IN AMPS
ST --A --P MCCB	MOLDED CASE CIRCUIT BREAKER (MCCB): --A - DENOTES TRIP SETTING IN AMPS --P - DENOTES NUMBER OF POLES ST - DENOTES SHUNT TRIP
--AT/--AF L S I G SOLID STATE TRIP	AIR INSULATED CIRCUIT BREAKER --AT - DENOTES TRIP SETTING IN AMPS --AF - DENOTES FRAME SIZE (L)ONG TIME DELAY - OVERLOAD PROTECTION (S)HORT TIME DELAY - SHORT CIRCUIT WITH DELAYED TRIP (I)NSTANTANEOUS TRIP - SHORT CIRCUIT PROTECTION (G)ROUND FAULT PROTECTION
Ⓜ	CLASS 2000 DIGITAL kWH AND kW/DEMAND METER HOUSED IN MULTIPLE METER UNIT. REFER TO SPECIFICATION 262713 FOR FURTHER DETAILS
	GROUNDING RODS TO ACHIEVE A MAXIMUM IMPEDANCE OF 5Ω TO GROUND PER SPECIFICATION 260526. RODS TO BE SPACED A MINIMUM OF 10' APART. QUANTITY AS REQUIRED TO ACHIEVE IMPEDANCE.

WIRING DEVICES

=⊖	20A, 125V, DUPLEX RECEPTACLE, NEMA 5-20R
=⊖	20A, 125V, DUPLEX RECEPTACLE, WITH GROUND FAULT CIRCUIT INTERRUPTER, NEMA 5-20R.
=⊗	20A, 125V, DUPLEX RECEPTACLE, WITH ARC FAULT CIRCUIT INTERRUPTER, NEMA 5-20R.
=⊕	20A, 125V, QUADRUPLEX RECEPTACLE, NEMA 5-20R
=⊕	20A, 125V, QUADRUPLEX RECEPTACLE, WITH GROUND FAULT CIRCUIT INTERRUPTER, NEMA 5-20R.
=⊕	20A, 125V, QUADRUPLEX RECEPTACLE, WITH ARC FAULT CIRCUIT INTERRUPTER, NEMA 5-20R.
=◐	20A, 125V, ABOVE COUNTERTOP MOUNTED DUPLEX RECEPTACLE, NEMA 5-20R
=◐	20A, 125V, ABOVE COUNTERTOP MOUNTED, DUPLEX RECEPTACLE, WITH GROUND FAULT CIRCUIT INTERRUPTER, NEMA 5-20R
=◐	20A, 125V, ABOVE COUNTERTOP MOUNTED, DUPLEX RECEPTACLE, WITH ARC FAULT CIRCUIT INTERRUPTER, NEMA 5-20R
=◐	20A, 125V, ABOVE COUNTERTOP MOUNTED, QUADRUPLEX RECEPTACLE NEMA 5-20R
=◐	20A, 125V, ABOVE COUNTERTOP MOUNTED, QUADRUPLEX RECEPTACLE, WITH GROUND FAULT CIRCUIT INTERRUPTER, NEMA 5-20R
=◐	20A, 125V, ABOVE COUNTERTOP MOUNTED, QUADRUPLEX RECEPTACLE, WITH ARC FAULT CIRCUIT INTERRUPTER, NEMA 5-20R
▣	20A, 125V, LEGRAND FLOORBOX (OR EQUAL), CONFIGURABLE PER CLIENT REQUIREMENT, SEE NOTE ON PLAN, NEMA 5-20R
⊟	20A, 125V, FLOORBOX, DUPLEX RECEPTACLE, 5-20R
⊞	20A, 125V, FLOORBOX, QUADRUPLEX RECEPTACLE, 5-20R
▣	20A, 125V, LEGRAND FLOORBOX (OR EQUAL), CONFIGURABLE PER CLIENT REQUIREMENT, SEE NOTE ON PLAN, WITH ARC FAULT CURRENT INTERRUPTER NEMA 5-20R
⊟	20A, 125V, FLOORBOX, DUPLEX RECEPTACLE, WITH ARC FAULT CURRENT INTERRUPTER, 5-20R
⊞	20A, 125V, FLOORBOX, QUADRUPLEX RECEPTACLE, WITH ARC FAULT CURRENT INTERRUPTER, 5-20R
=⊖	20 A 125V CONTROLLED DUPLEX RECEPTACLE
=⊕	20 A 125V CONTROLLED QUAD RECEPTACLE
Ⓙ	WALL / CEILING MOUNTED JUNCTION BOX. PROVIDE EXTENSION WHEN USED FOR FLEX CONNECTION. VERIFY LOCATION AND MOUNTING HEIGHT WITH ARCHITECTURAL DRAWINGS PRIOR TO INSTALLATION. WEATHERPROOF WHEN INSTALLED OUTSIDE. PROVIDE DISCONNECT SWITCH WHERE INDICATED OR REQUIRED BY CODE.
	30A, 125V, 1Ø, 2P, 3W TWIST-LOCK RECEPTACLE. NEMA L5-30R
	30A, 250V, 1Ø, 2P, 3W TWIST-LOCK RECEPTACLE. NEMA L6-30R

CABLE AND CONDUIT

NEUTRAL HOT GROUND P5C1-2	WHERE NO WIRE SIZE SHOWN, DEFAULT CIRCUIT HOMERUN INDICATES PANEL ORIGIN AND CIRCUIT NUMBER WITH: • 3/4" CONDUIT, (1) #12 HOT PER CIRCUIT, (1) #12 NEUTRAL PER CIRCUIT AND (1) #12 GROUND PER CIRCUIT. • PROVIDE ADDITIONAL (1) #12 ISOLATED GROUND FOR DEVICES INDICATED WITH "IG"
P5C1-7 3/4"C,1#8,#8N,#10G	DESIGNATED CIRCUIT HOMERUN INDICATES PANEL ORIGIN, CIRCUIT NUMBER AND CONDUIT AND WIRING SIZES. REFER TO PANEL SCHEDULES AS WELL
J	SHORT RADIUS ELBOW TURN-UP WITH INSIDE THREAD AND PLUG FLUSH WITH FLOOR. PROVIDE EXTENSION UP TO CAST JUNCTION BOX 6" A.F.F. U.O.N. ARROWS DENOTES CONNECTION TO DESIGNATION EQUIPMENT
———	WIRING IN CONDUIT CONCEALED IN CEILING OR WALL.
-------	WIRING IN CONDUIT CONCEALED UNDER FLOOR OR UNDERGROUND
———○	CONDUIT TURNING UP
———●	CONDUIT TURNING DOWN
———]	CONDUIT STUB WITH WIRE PULL AND CAP
▨ CSB	CABLE SUPPORT BOX
———	TELECOM CABLE TRAY, 8" WIDE X 2" DEEP, UON. COORDINATE LOCATION WITH DUCTWORK, PLUMBING, FIRE PROTECTION, ELECTRICAL, AND LIGHT FIXTURES.
	WALL MOUNTED MULTI-SERVICE ALUMINUM RACEWAY COMPLETE WITH RECEPTACLES AND OUTLETS AS INDICATED ON THE PLANS. MOUNTED AT 42" AFFL TO BOTTOM OF RACEWAY, ANODIZED SATIN FINISH. AS PER LEGRAND DS4000 OR APPROVED EQUAL. FURNISH SAMPLE FOR ARCHITECT APPROVAL PRIOR TO ORDERING

TELECOM SYMBOLS

⊗	MULTI-SERVICE 6-GANG FLOOR BOX WITH (2) DUPLEX RECEPTACLES, 20A (REFER TO WIRING DEVICES SYMBOLS) (1) GANG DATA, (1) GANG SPARE. INSTALL WITH FLOOR FINISH INSERT. AS LEGRAND EVOLUTION EFB6 SERIES OR APPROVED EQUAL
◁'X'	RJ45 DATA OUTLET ('x' DENOTES NUMBER OF GANGS)
◀	TELEPHONE OUTLET
◀◁	COMBO DATA/TELEPHONE OUTLET

FIRE ALARM

SD	SMOKE DETECTOR
CM	CARBON MONOXIDE DETECTOR
SCM	COMBO SMOKE / CARBON MONOXIDE DETECTOR

ABBREVIATIONS

A	AMPERES
AC	AIR CONDITIONER
AFFL	ABOVE FINISHED FLOOR LEVEL
AFI	ARC FAULT INTERRUPTION
AHU	AIR HANDLER UNIT
AIC	AMPERE INTERRUPTING CAPACITY RATING
ATS	AUTOMATIC TRANSFER SWITCH
AWG	AMERICAN WIRE GAUGE
BFG	BELOW FINISH GRADE
C	CONDUIT
CATV	CABLE ANTENNA TELEVISION SYSTEM
CB	CIRCUIT BREAKER
CCTV	CLOSED CIRCUIT TELEVISION
CEC	CALIFORNIA ELECTRICAL CODE
CKT	CIRCUIT
CO	CARBON MONOXIDE SENSOR
C.O.	CONDUIT ONLY
CPT	CONTROL POWER TRANSFORMER
(E)	EXISTING
EF	EXHAUST FAN
EL	ELEVATOR
E.C.	ELECTRICAL CONTRACTOR
E, EM	EMERGENCY
EMT	ELECTRICAL METALLIC TUBING
FA	FIRE ALARM
FACP	FIRE ALARM CONTROL PANEL
FBO	FURNISHED BY OTHERS
FIBO	FURNISHED AND INSTALLED BY OTHERS
FCU	FAN COIL UNIT
FL	FLOOR
FLA	FULL LOAD AMPERES
FSD	FIRE SMOKE DAMPER
G.C.	GENERAL CONTRACTOR
GRD	GROUND
GFCI	GROUND FAULT CIRCUIT INTERRUPTER
HP	HORSE POWER
IG	INSOLATED GROUND
INT	ADDRESSABLE FIRE ALARM RELAY MODULE
JB	JUNCTION BOX
kcmil	THOUSAND CIRCULAR MILS
kVA	KILOVOLT AMPERES
kW	KILOWATT
KX	KITCHEN EXHAUST
LBS	LOAD BREAK SWITCH
LTG	LIGHTING
LV	LOW VOLTAGE
LVR	LOW VOLTAGE RELAY
MGB	MAIN GROUNDING BAR
MCB	MAIN CIRCUIT BREAKER
MCC	MOTOR CONTROL CENTER
MCCB	MOLDED CASE CIRCUIT BREAKER
MCP	MOTOR CONTROL PANEL
M.C.	MECHANICAL CONTRACTOR
MD	MOTORIZED DAMPER
MGB	MAIN GROUND BAR
MIN	MINIMUM
MLO	MAIN LUGS ONLY
MSB	MAIN SWITCHBOARD
MTD	MOUNTED
(N)	NEW
N	NEUTRAL
N/A	NOT APPLICABLE
NEC	NATIONAL ELECTRICAL CODE
NEMA	NATIONAL ELECTRICAL MFG ASSOC.
NRTL	NATIONAL RECOGNIZED TESTING LABORATORY
NTS	NOT TO SCALE
OC	ON CENTER
P	POLES
PB	PULL BOX
PH, Ø	PHASE
PV	PHOTOVOLTAIC
PVC	POLYVINYL CHLORIDE
PWR	POWER
PWCP	PRE-WIRED CONTROL PANEL
RFAP	REMOTE FIRE ALARM ANNUNCIATOR PANEL
RGB	REFERENCE GROUND BAR
RGS	RIGID GALVANIZED STEEL
SB	SWITCHBOARD
SCE	SOUTHERN CALIFORNIA EDISON
SF	SUPPLY FAN
SPD	SURGE PROTECTIVE DEVICE
SPDT	SINGLE POLE DOUBLE THROW
SPST	SINGLE POLE SINGLE THROW
SW	DISCONNECT SWITCH
SWGR	SWITCHGEAR
T/C	TIME CLOCK
TC	TERMINAL CABINET
TEL	TELEPHONE
TGB	TELECOM GROUND BAR
TTB	TELEPHONE TERMINAL BOARD
TV	TELEVISION
TVSS	TRANSIENT VOLTAGE SURGE SUPPRESSION
TX	TOILET EXHAUST FAN
TYP	TYPICAL
UG	UNDERGROUND
UON	UNLESS OTHERWISE NOTED
V	VOLTS
VA	VOLTAMPS
VAV	VARIABLE AIR VOLUME BOX
VD	VIDEO DISPLAY
VFD	VARIABLE FREQUENCY DRIVE
VT	VAPORTIGHT
W	WATTS
WM	WALL MOUNTED
WP	WEATHERPROOF
WT	WATERTIGHT
XFMR	TRANSFORMER
XP	EXPLOSION PROOF

SCOPE OF WORK

LIGHTING AND POWER FOR NEW RESTROOM ALTERATION.

ELECTRICAL SHEET INDEX

NO.	SHEET	DESCRIPTION	REMARKS
1	E0.00	GENERAL NOTES	-
2	E0.01	CONSTRUCTION NOTES	-
3	E0.02	SPECIFICATIONS	-
4	E0.03	LIGHTING SCHEDULE	-
5	E1.00	LIGHTING AND POWER PLAN	-
6	T0.01	T-24 ENERGY	-
7	T0.01	T-24 ENERGY	-

COORDINATION NOTES

1. CONTRACTOR SHALL COORDINATE ALL WORK WITH OTHER TRADES TO ENSURE INSTALLATION IS MADE IN ACCORDANCE WITH THE CONTRACT DOCUMENTS. ALL EQUIPMENT LOCATIONS AND CONDUIT RUNS SUPPLIED AND/OR INSTALLED UNDER THIS SECTION SHALL BE INSTALLED TO AVOID CONFLICTS OR OBSTRUCTIONS TO OTHER TRADES.
2. CONTRACTOR SHALL PROVIDE ALL NECESSARY PULL BOXES, VERTICAL SUPPORT BOXES, AND CONDUIT OFFSETS REQUIRED TO ACCOMPLISH THE ABOVE NOTED COORDINATION AT NO ADDITIONAL COST TO THE OWNER, WHETHER OR NOT INDICATED ON PLANS. ALL VERTICAL SUPPORT BOXES, PULL BOXES, ETC. SHALL BE INSTALLED WHERE REQUIRED TO FACILITATE PULLS AND AT CODE REQUIRED INTERVALS, AT A MINIMUM.
3. REFER TO DIVISION 21, 22 AND 23 DRAWINGS AND SCHEDULES FOR WORK TO BE FURNISHED AND INSTALLED BY DIVISION 26 THAT ARE NOT SPECIFICALLY IDENTIFIED ON THE ELECTRICAL DRAWINGS. CONTRACTOR TO MAKE AN ALLOWANCE FOR PROVIDING 120V TO ALL BUILDING AUTOMATION NETWORK MANAGER CONTROL PANELS AND 24V NETWORK POWER SUPPLIES AS REQUIRED.
4. ALL PLUMBING AND HVAC (DIVISION 21, 22 AND 23) EQUIPMENT COMPONENTS (FANS, COMPRESSORS, PUMPS, VFDs, MOTOR CONTROLLERS, STARTERS AND DISCONNECTS, ETC) THAT ARE REQUIRED AS PART OF THE SYSTEM, AND THAT ARE NOT FACTORY PRE-WIRED, ARE TO BE SUPPLIED (BY DIVISION 21, 22 OR 23 U.O.N) AND INSTALLED BY DIVISION 26 U.O.N. IF THE SUPPLIED VFD OR EQUIPMENT CONTROLLER IS NOT LOCATED WITHIN SIGHT OF A MOTOR AND IS NOT SUITABLE FOR USE AS A DISCONNECTING MEANS, THE ELECTRICAL CONTRACTOR SHALL PROVIDE A SEPARATE MOTOR DISCONNECT, AT THE MOTOR LOCATION, THAT IS PROPERLY SIZED AND IS SUITABLE FOR USE AS A DISCONNECTING MEANS FOR ALL MOTORS AND/OR EQUIPMENT SUPPLIED WITH MOTORS.
5. THE LOCATION OF DIVISION 27 AND 28 POWER REQUIREMENTS IS SHOWN FOR REFERENCE ONLY. REFER TO DIVISION 27 AND 28 DRAWINGS FOR EXACT LOCATIONS. MOUNT POWER ADJACENT TO DIVISION 27 AND 28 BOXES. WHERE POWER IS REQUIRED IN THE CEILING, PROVIDE 60" OF SLACK TO ALLOW FINAL SERVICE LOCATION TO BE COORDINATED WITH DIVISION 27 AND DIVISION 28 DEVICE LOCATIONS. COORDINATE THE INSTALLATION WITH THE APPROPRIATE TRADES AND THE GENERAL CONTRACTOR PRIOR TO INSTALLATION.
6. REFER TO DIVISION 27 AND DIVISION 28 DRAWINGS FOR CONDUIT, BOXES AND CABLE TRAY REQUIREMENTS.
7. ALL MOTORS SHALL BE PROVIDED WITH OVERLOAD PROTECTION IN ACCORDANCE WITH CALIFORNIA ELECTRICAL CODE SECTION 430.31, 430.32.

FIRST SUBMITTAL 08.21.19

GKA ARCHITECTS

BUILDING ALTERATIONS

THOUSAND OAKS COMMUNITY CENTER
CHILDREN'S RESTROOM
2525 MOORPARK RD.,
THOUSAND OAKS, CA 91362

CLIENT: CONEJO RECREATION & PARK DISTRICT

Architect
G. Korn, AIA
GKA Architects
1301 N La Brea Ave
Inglewood, CA 90302
gkorn@gka-arc.com

A & N DESIGN GROUP
MECHANICAL· PLUMBING· ELECTRICAL
21550 OXNARD STREET #300
WOODLAND HILLS, CA 91367
TEL: (818)-288-4361
FAX: (818)-758-0087

AMIR AMIRI RAZAVIAN
No. E20918
Exp. 09/30/20

No.	Description	Date

Project number
Date 08.21.19
Drawn by AN
Checked by AN
Drawing Name
GENERAL NOTES
Drawing No.
E0.00
NOTE: DO NOT SCALE DRAWINGS
Scale -

CONSTRUCTION NOTES

1. PROVIDE ELECTRICAL INSTALLATION IN ACCORDANCE WITH THE C.E.C. AND THE NATIONAL ELECTRICAL SAFETY CODE, LOCAL CODES, ORDINANCES AND THE REQUIREMENTS OF UTILITY COMPANIES FURNISHING SERVICES TO INSTALLATION.

2. PROVIDE ALL WORK AND ITEMS NECESSARY FOR COMPLETE AND FUNCTIONAL ELECTRICAL SYSTEM. THE ELECTRICAL DRAWINGS ARE DIAGRAMMATIC AND DO NOT NECESSARILY SHOW EVERY CONDUIT, BOX, CONDUCTOR OR SIMILAR ITEMS FOR A COMPLETE INSTALLATION.

3. THE CONTRACTOR SHALL VISIT THE SITE PRIOR TO BID AND DETERMINE CONDITIONS WHICH MAY AFFECT BID. ANY ITEMS NOT FULLY UNDERSTOOD SHALL BE BROUGHT TO THE ATTENTION OF THE ARCHITECT PRIOR TO BIDDING.

4. REFERENCE ARCHITECTURAL DRAWINGS FOR EXACT LOCATION OF DEVICES. QUESTIONS CONCERNING THE LOCATION OF DEVICES AND EQUIPMENT SHALL BE DIRECTED TO THE ARCHITECT. FAILURE TO COORDINATE REQUIREMENTS SHALL IN NO WAY RESULT IN ADDITIONAL COMPENSATION BEING PROVIDED TO THE CONTRACTOR.

5. WHEREVER THE WORD "PROVIDE" IS USED, IT MEANS, "FURNISH AND INSTALL ALL REQUIRED EQUIPMENT FOR A COMPLETE INSTALLATION AND SHALL BE FULLY OPERATIONAL."

6. COORDINATE THE LOCATION OF ALL ELECTRICAL EQUIPMENT WITH OTHER TRADES AND THE GENERAL CONTRACTOR PRIOR TO INSTALLATION.

7. REFER TO EQUIPMENT DRAWINGS FOR THE CHARACTERISTICS AND REQUIREMENTS (SIZE, LOCATION, ETC.) OF MECHANICAL EQUIPMENT, UNLESS OTHERWISE INDICATED. COORDINATE INSTALLATION AND LOCATION OF ALL EQUIPMENT WITH MECHANICAL AND GENERAL CONTRACTORS PRIOR TO INSTALLATION. VERIFY ALL OVERCURRENT PROTECTION DEVICE RATINGS, WIRE SIZES AND THE SIZE OF ALL DISCONNECTING MEANS PRIOR TO INSTALLATION. COORDINATE THE INSTALLATION OF THE EQUIPMENT WITH MECHANICAL AND GENERAL CONTRACTORS PRIOR TO INSTALLATION. FOR ITEMS TO BE FURNISHED AND/OR INSTALLED BY ELECTRICAL CONTRACTOR, SEE MECHANICAL DRAWINGS. REFER TO THE MECHANICAL DRAWINGS CONTROL DIAGRAMS FOR ALL TIME SWITCHES, RELAYS, STARTERS, THERMOSTATS, CONDUIT FOR LINE/LOW VOLTAGE AS REQUIRED. ALL EQUIPMENT SHALL COMPLY WITH CEC SECTIONS 110.9 AND 110.10 AND SUITABLE FOR THE AVAILABLE FAULT CURRENT.

8. ALL SMOKE DETECTORS ARE NOT TO BE MOUNTED IN FRONT OF HVAC AIR DIFFUSERS, SUPPLIES OR RETURNS. VERIFY AT THE JOB SITE & MAKE ALL ADJUSTMENTS, WHERE REQUIRED PER CODE, NFPA 72 AND THE INSTALLATION INSTRUCTIONS.

9. ALL SMOKE DETECTORS SHALL BE INTERCONNECTED AS REQUIRED BY NFPA 72.

10. PROVIDE CONDUCTORS AND RACEWAYS PER 2014 NATIONAL ELECTRICAL CODE AND LOCAL CODES.

MATERIALS AND METHODS

11. RACEWAYS AND CABLES SHALL BE ROUTED CONCEALED WITHIN THE BUILDING STRUCTURE WHERE POSSIBLE. WHERE RACEWAYS OR CABLES CANNOT BE CONCEALED, IT SHALL BE INSTALLED PER PROJECT MANAGER'S DIRECTION. ALL CONDUIT SHALL BE INSTALLED IN NEAT SYMMETRICAL LINES, HORIZONTAL OR PERPENDICULAR TO BUILDING COLUMNS AND ROOF LINES. CONDUITS SHALL BE GROUPED ON COMMON SUPPORTS WHEREVER POSSIBLE.

12. EXPOSED CONDUIT ROUTING: CONDUITS MAY BE ROUTED EXPOSED. WHERE SUBJECT TO PHYSICAL DAMAGE, THEY SHALL BE PROTECTED OR BE GRC OR IMC.

13. OUTDOOR EXPOSED CONDUIT ROUTING: CONDUITS ROUTED ON ROOF OR EXPOSED TO WEATHER SHALL BE EMT, GRC, IMC, PVC OR LIQUID-TIGHT FLEX. PROVIDE WATER-TIGHT CONNECTIONS AND FITTINGS.

14. CLEARANCES: VERIFY PHYSICAL DIMENSIONS OF EQUIPMENT TO ENSURE THAT ACCESS CLEARANCES CAN BE MET PRIOR TO ORDERING AND INSTALLATION OF EQUIPMENT.

15. CONNECTIONS: PROVIDE EMT, GRC, IMC, METALLIC FLEX, OR LIQUIDATE FLEX CONDUITS FOR CONNECTIONS TO MOTORS OR MOTORIZED EQUIPMENT.

16. WIRING: PROVIDE MINIMUM #12 AWG WIRE SIZE. THE MINIMUM ALLOWED RACEWAY SHALL BE BE 1/2". FLEXIBLE CONDUIT AND FLEXIBLE CABLE IS PERMISSIBLE THROUGHOUT THE BUILDING.

17. WIRING: PROVIDE MINIMUM #10 AWG COPPER CONDUCTOR SIZE IN 120V BRANCH CIRCUIT HOME RUNS OVER 75' IN LENGTH OR AS REQUIRED FOR VOLTAGE DROP MITIGATION. SELECTION OF DEVICES WITH ADEQUATELY SIZED CABLE TERMINATION TERMINALS IS THE RESPONSIBILITY OF THE CONTRACTOR.

18. WIRING: POWER WIRING FOR BRANCH CIRCUITS SHALL BE COPPER FOR #8 AWG CONDUCTORS AND SMALLER. CONDUCTORS #1 AWG AND LARGER SHALL BE XHHW-2.

19. DISCONNECTS: PROVIDE DISCONNECTING MEANS, FUSED AND NON-FUSED, AS SHOWN AND REQUIRED BY CODE FOR EQUIPMENT FURNISHED UNDER ELECTRICAL, MECHANICAL AND PLUMBING SCOPES OF WORK.

20. FUSES: PROVIDE FUSES PER EQUIPMENT NAMEPLATE UNLESS OTHERWISE INDICATED. FUSES SHALL BE PROVIDED WITH REJECTION TYPE FUSE HOLDERS.

21. SUPPORT: SUPPORT LIGHT FIXTURES FROM BUILDING STRUCTURE. DO NOT SUPPORT FIXTURES FROM SUSPENDED CEILINGS OR DRYWALL.

22. LABELS: ELECTRICAL PANELS, TIME SWITCHES, DISCONNECT WITCHES, STARTERS, CONTACTORS, PULL BOXES, ETC. SHALL BE PERMANENTLY LABELED TO IDENTIFY ITS DESIGNATION OR UNIT SERVED. ENCLOSURES LARGER THAN 6"X6", PROVIDED FOR EQUIPMENT THAT IS COVERED BY ARTICLE 700 OR 701, SHALL HAVE A PERMANENT IDENTIFICATION PLATE THAT IS SUBSTANTIALLY ORANGE IN COLOR.

23. PAINTING: ELECTRICAL ENCLOSURES SHALL BE PAINTED ONLY AS REQUIRED BY ARCHITECT.

24. COVER PLATES: PROVIDE AS FOLLOWS. SUBMIT SAMPLE OF EACH FOR APPROVAL.
    24.1. MECHANICAL AND ELECTRICAL ROOMS: GALVANIZED STEEL
    24.2. ALL OTHER AREAS: REFER TO SPECIFICATIONS

25. CONTRACTOR SHALL VERIFY THE ELECTRICAL REQUIREMENTS OF ALL NEW EQUIPMENT TO BE USED. ALL SPECIAL PURPOSE OUTLETS INDICATED ON PLAN SHALL BE VERIFIED WITH THE EQUIPMENT MANUFACTURER AND OWNER PRIOR TO INSTALLATION. THE ELECTRICAL CONTRACTOR SHALL ENSURE PROPER WIRING AND COMPATIBILITY WITH ATTACHMENT PLUGS OR JUNCTION BOXES THAT MAY BE FURNISHED AS AN INTEGRAL PART OF THE EQUIPMENT.

26. ALL RECEPTACLES INSTALLED ON THE ROOF OR EXTERNALLY SHALL BE GFCI-PROTECTED AND LISTED AS WEATHER RESISTANT.

27. ELECTRICAL OUTLET BOXES SHALL BE HORIZONTALLY SEPARATED BY NOT LESS THAN 24" FROM OUTLETS IN THE OPPOSITE WALL SURFACE AND BACK SIDE OF BOXES SHALL BE SEALED WITH 1/8" RESILIENT SEALANT AND BACKED BY A MINIMUM OF 2" THICK MINERAL FIBER INSULATION.

28. ALL FLOOR STANDING EQUIPMENT SHALL BE MOUNTED ON 4" HIGH CONCRETE HOUSEKEEPING PADS. THE SIZE OF THE CONCRETE PAD SHALL BE COORDINATED WITH THE EQUIPMENT SUPPLIER AND INSTALLATION INSTRUCTIONS. EQUIPMENT PADS SHALL NOT EXTEND MORE THAN 6" BEYOND THE EQUIPMENT.

SITE ELECTRICAL

29. TRENCHING: COORDINATE ALL TRENCH WORK WITH OTHER TRADES, UTILITIES, AND THE GENERAL CONTRACTOR PRIOR TO COMMENCEMENT OF WORK. VERIFY LOCATION OF DRAINAGE SYSTEMS AND STORM WATER RETENTION SYSTEMS.

30. UNDERGROUND CONDUIT: PROVIDE PVC, SCHEDULE 40, 3/4" MINIMUM. PROVIDE GRC OR IMC CONDUIT ELBOWS, OR CONCRETE ENCASEMENT, FOR ALL BENDS OR CHANGES OF DIRECTION. BOND METALLIC ELBOWS ARE REQUIRED BY THE CALIFORNIA ELECTRICAL CODE.

31. DIRECT-BURIED: CONDUITS FOR BRANCH CIRCUITS, FEEDERS, OR LOW VOLTAGE WIRING, THAT ARE INSTALLED OUTSIDE BUILDINGS OR STRUCTURES AND NOT INSTALLED UNDER PAVED DRIVEWAYS OR PARKING AREAS, SHALL BE A MINIMUM OF 18" BELOW GRADE. WHERE CONCRETE ENCASEMENT IS PROVIDED, BURIAL DEPTH MAY BE REDUCED AS INDICATED BY THE NATIONAL ELECTRICAL CODE. PROVIDE MARKER TAPE, OR A TRACER WIRE, A MINIMUM OF 6" ABOVE THE RACEWAY. RACEWAYS INSTALLED UNDER DRIVEWAYS, ALLEYS, PARKING AREAS OR AREAS SUBJECT TO VEHICULAR TRAFFIC SHALL BE A MINIMUM OF 24" BELOW THE BOTTOM OF THE PAVING MATERIALS, NO EXCEPTIONS. PROVIDE MARKER TAPE AS INDICATED ABOVE.

32. BELOW SLAB: CONDUIT ROUTED BELOW ON-GRADE FLOOR SLABS SHALL BE INSTALLED PRIOR TO CONCRETE PLACEMENT. ROUTE CONDUITS BELOW SLAB, AS STRAIGHT AS POSSIBLE, TO MINIMIZE BENDS.

33. ALL CONDUITS PENETRATING THE BUILDING ENVELOPE FROM BELOW GRADE SHALL FOLLOW WATERPROOFING REQUIREMENTS IN THE ARCHITECTURAL DRAWINGS.

NEUTRALS

34. AT CONTRACTORS OPTION, NEUTRALS MAY BE SHARED ON COMBINED HOME RUNS UNLESS THE CIRCUIT HAS A GFCI BREAKER, AN AFCI BREAKER, HAS AN ISOLATED GROUND, OR IS FROM A PANEL WITH TVSS PROTECTION. ANY NEUTRAL DOWNSTREAM FROM A DIMMER SHALL BE DEDICATED TO THE DIMMED LOAD. THE CONTINUITY OF THE NEUTRAL CANNOT BE DEPENDANT ON A DEVICE.

35. NEUTRAL WIRES SHOWN FOR TWO AND THREE POLE MECHANICAL AND KITCHEN EQUIPMENT MAY BE OMITTED UPON VERIFICATION THAT THEY ARE NOT REQUIRED FOR THE PROPER OPERATION OF THE EQUIPMENT AND INSTALLED PER THE MANUFACTURER'S INSTALLATION INSTRUCTIONS.

LIGHTING

36. PROVIDE LIGHT FIXTURES WITH PROPER FITTING FLANGES, MOUNTING SUPPORTS, AND ACCESSORY ITEMS, LISTED BY AN APPROVED TESTING LABORATORY FOR THE CONDITIONS OF USE.

37. GROUP SWITCHES IN A GANG BOX UNDER COMMON COVER PLATE, WHERE APPLICABLE.

38. WHERE CONDUIT, CABLE, CABLE TRAY OR OTHER ELECTRICAL EQUIPMENT SUCH AS CUTOUT BOXES, PANELBOARDS AND LUMINARES PENETRATE RATED ASSEMBLIES, FIRE BARRIERS, FIRE WALLS, FIRE PARTITIONS, SMOKE BARRIERS, OR SMOKE PARTITIONS, THE ELECTRICAL CONTRACTOR SHALL PROVIDE AN APPROPRIATE FIRE OR SMOKE STOPPING SYSTEM THAT IS LISTED BY UNDERWRITERS LABORATORIES OR COMPLIES WITH THE APPROPRIATE ICC EVALUATION REPORT AND DOES NOT REDUCE THE RATING OF THE ASSEMBLY. ALL THROUGH AND MEMBRANE PENETRATIONS SHALL BE SUBMITTED TO THE ARCHITECT OF RECORD FOR APPROVAL PRIOR TO INSTALLATION. ALL ACCESS PANELS SHALL BE APPROVED AND LISTED FOR THE ASSEMBLY IN WHICH THEY ARE BEING INSTALLED. COMPLY WITH ALL REQUIREMENTS OF DIVISION 26 SPECIFICATIONS. SEE ARCHITECTURAL DRAWINGS FOR RATINGS OF ALL ASSEMBLIES. CONTRACTOR SHALL COORDINATE THIS WORK WITH THE GENERAL CONTRACTOR PRIOR TO INSTALLATION.

39. WALL-MOUNTED OUTLETS, SWITCHES, AND CONTROL DEVICES, SHOULD BE MOUNTED AT THE HEIGHTS INDICATED IN THESE DOCUMENTS. THE ELECTRICAL CONTRACTOR SHALL VERIFY AND FULLY COMPLY WITH, ALL AMERICANS WITH DISABILITIES REQUIREMENTS AND MEET ALL REQUIREMENTS ESTABLISHED BY THE HOUSING AND URBAN DEVELOPMENT (HUD) STANDARDS AS REQUIRED BY THE AUTHORITY HAVING JURISDICTION.

40. ALL LIGHTING FIXTURES SHALL BE MOUNTED AS INDICATED IN THESE DRAWINGS.

41. ALL CONTROL EQUIPMENT REQUIRING CERTIFICATION UNDER TITLE 24 TO BE CERTIFIED BY THE CALIFORNIA ENERGY COMMISSION.

42. LIGHTING FIXTURES IN CONTACT WITH INSULATION TO BE IC RATED OR PROVIDE 3 INCH MINIMUM CLEARANCE.

43. FIXTURES INSTALLED IN RATED CEILINGS SHALL BE INSTALLED IN AN MANNER THAT DOES NOT REDUCE THE RATING OF THE ASSEMBLY. WHERE INSTALLED IN A RATED ASSEMBLY IT MUST MEET THE MINIMUM REQUIREMENTS ESTABLISHED BY UL OR ICC.

44. ALL RECESSED INCANDESCENT FIXTURES INSTALLED IN GYPBOARD CEILING SHALL BE EQUIPPED WITH AUTO-RESETTING THERMAL PROTECTION.

45. CONTRACTOR SHALL NOTIFY ENGINEER OF ANY CONFLICT BETWEEN LIGHT FIXTURE LOCATIONS, MAIN RUNNERS, DUCTS, BUILDING STRUCTURE, ETC.

46. ALL LIGHT FIXTURES TO BE SELECTED BY ARCHITECT/OWNER, FURNISHED AND INSTALLED BY CONTRACTOR.

47. ALL RECESSED DOWNLIGHTS TO BE THERMALLY PROTECTED PER N.E.C. & U.L. REQUIREMENTS.

48. ALL LIGHT FIXTURES USED ON THE EXTERIOR OF THE BUILDING OR WHERE SUBJECT TO WATER INFILTRATION, SHALL BE LISTED FOR WET LOCATIONS.

49. ALL EXTERIOR LIGHTING TO BE CONTROLLED BY PHOTO-CELL WITH TIME SWITCH OVERRIDE, U.O.N.

50. LED DRIVER, FLUORESCENT BALLAST AND ALL ELECTRONIC PRODUCTS, SHALL REQUIRED TO BE COMPLIANT WITH THE FCC CFR 47, AND UL.

51. REFER TO ARCHITECTURAL PLANS FOR EXACT LOCATION AND ELEVATION OF ALL LIGHTING FIXTURES AND ALL DEVICES. ALL WALL-MOUNTED DEVICE HEIGHTS SHALL BE VERIFIED WITH THE ARCHITECT PRIOR TO ROUGH-IN.

52. VERIFY EXACT CEILING CONSTRUCTION WITH ARCHITECTURAL REFLECTED CEILING PLAN AND PROVIDE LIGHTING FIXTURES WITH ALL NECESSARY MOUNTING HARDWARE.

53. ALL RECESSED FIXTURES SHALL BE PROVIDED WITH ALL REQUIRED STRUCTURAL SUPPORTS AS REQUIRED BY THE CURRENTLY ADOPTED ISSUE OF THE IBC, OR CBC WHERE ADOPTED, IN ADDITION TO ANY LOCAL CODES. FIXTURES SHALL NOT BE SUPPORTED BY GYPSUM BOARD.

54. ALL COVE MOUNTED FIXTURES SHALL EXTEND THE FULL LENGTH OF THE COVE. CONTRACTOR TO FIELD MEASURE COVE LENGTH AND ORDER QUANTITY OF FIXTURES AS REQUIRED.

55. ALL EMERGENCY BATTERY PACK FIXTURES (UNIT EQUIPMENT) SHALL BE PROVIDED WITH A CONSTANT HOT CONNECTION TO THE CHARGING LEAD. SEE GENERAL LIGHTING FIXTURE SCHEDULE NOTES FOR MORE INFORMATION.

56. REFER TO ARCHITECTURAL REFLECTED CEILING PLANS FOR EXIT SIGN CHEVRONS AND NUMBER OF FACES PER EXIT SIGN. ANY DISCREPANCIES BETWEEN EXIT SIGNS SHOWN ON THE ELECTRICAL AND ARCHITECTURAL PLANS SHALL BE BROUGHT TO THE ATTENTION OF THE ARCHITECT PRIOR TO ORDERING EXIT SIGNS.

57. WHEN EXPOSED CEILINGS OR OPEN GRID CONDITIONS OCCUR. THE CONTRACTOR WILL NEED TO PROVIDE THE FOLLOWING ITEMS:
    57.1. ALL BRANCH CIRCUITS SHALL BE IN EMT.
    57.2. ALL BRANCH CIRCUITS SHALL BE ROUTED, NEATLY TRAINED, AND IN PARALLEL TO STRUCTURES OR DUCT WORK. THE TERM "TRAINED" MEANS ALL PARALLEL CONDUITS SHALL MAINTAIN THE SAME SPATIAL RELATIONSHIP WITH EACH OTHER FOR ENTIRE RUN TO INCLUDE RADIUS BENDS AND SWEEPS. VISUALLY OBJECTIONABLE BRANCH CIRCUITS WILL BE REROUTED AT THE REQUEST OF THE ARCHITECT AT NO ADDITIONAL COST.

58. ALL LED REMOTE INDICATORS FOR DUCT DETECTORS AND FIRE/SMOKE DAMPERS REQUIRED BY THE LOCAL AHJ SHALL BE LOCATED IN CEILINGS AND COORDINATED WITH THE ARCHITECT PRIOR TO ANY ROUGH-IN.

59. RECESSED FIXTURES LOCATED IN A RATED ASSEMBLY SHALL BE PROVIDED WITH A 5-SIDED RATED ENCLOSURE SO CONSTRUCTED AS TO PROVIDE THE REQUIRED CLEARANCES BETWEEN THE FIXTURE AND THE ENCLOSURE AND ALLOW FOR PROPER VENTILATION AS REQUIRED BY THE FIXTURE'S LISTING. SEE NOTE #39 UNDER CONSTRUCTION NOTES FOR ADDITIONAL REQUIREMENTS.

60. PROVIDE AN ADDITIONAL JUNCTION BOX ABOVE ALL PANELBOARDS, IN AN ACCESSIBLE LOCATION, TO ALLOW FOR FUTURE CIRCUIT EXTENSIONS.

61. UNLESS SPECIFICALLY SHOWN AS (E), (R), (ER), (D), EXISTING OR NON-BOLD, ALL ELECTRICAL DEVICES SHOWN ARE NEW.

62. CONTRACTOR TO PROVIDE COMPLETE SET OF SHOP DRAWINGS INDICATING ALL DEVICES AND WIRING ASSOCIATED WITH THE SYSTEM FOR APPROVAL TO THE ENGINEER OF RECORD.

63. EXIT SIGNS SHALL BE INTERNALLY OR EXTERNALLY ILLUMINATED AT ALL TIMES AND SHALL BE CONNECTED TO AN EMERGENCY POWER SYSTEM (BATTERIES, UNIT EQUIPMENT OR STANDBY GENERATOR, THAT ARE SUITABLE FOR THE PURPOSE) THAT WILL AUTOMATICALLY ILLUMINATE THE EXIT SIGNS FOR A DURATION OF NOT LESS THAN 90 MINUTES.

64. THE MEANS OF EGRESS WILL BE ILLUMINATED TO A LEVEL OF NOT LESS THAN ONE FOOT-CANDLE AT THE WALKING SURFACE, ALONG THE PATH OF TRAVEL, AT ALL TIMES THE BUILDING SPACE SERVED BY THE MEANS OF EGRESS IS OCCUPIED.

65. LOW VOLTAGE LIGHTING
    65.1. PROVIDE LOW VOLTAGE TRANSFORMERS IN NEARBY ACCESSIBLE CEILING SPACE.
    65.2. PROVIDE LOW VOLTAGE CONDUCTORS SIZED PER MANUFACTURER'S GUIDELINES TO MINIMIZE VOLTAGE DROP.

LIGHTING CONTROL

66. THE MAXIMUM LIGHTING POWER THAT MAY BE CONTROLLED FROM A SINGLE SWITCH OR AUTOMATIC CONTROL SHALL NOT EXCEED THAT WHICH IS PROVIDE BY A TWENTY AMPERE CIRCUIT LOADED TO NOT MORE THAN EIGHTY PERCENT. A MASTER CONTROL MAY BE INSTALLED PROVIDED THE INDIVIDUAL SWITCHES RETAIN THEIR CAPABILITY TO FUNCTION INDEPENDENTLY.

67. BATTERY BALLASTS & EMERGENCY FIXTURES SHALL BE CONNECTED TO AN UNSWITCHED LEG OF THE DESIGNATED CIRCUIT.

68. EMERGENCY COMMUNICATION: PROVIDE A 2-WAY COMMUNICATION SYSTEM PER CBC 1007.

69. ACCESS PANELS: CONTRACTOR IS RESPONSIBLE FOR PROVIDING THEIR OWN ACCESS PANELS FOR ACCESS TO THEIR EQUIPMENT. CONTRACTOR SHALL SUBMIT A FULL PLAN SHOWING LOCATIONS TO THE GENERAL CONTRACTOR PRIOR TO INSTALLATION. SEE CONSTRUCTION NOTE #39 FOR ADDITIONAL REQUIREMENTS.

70. COMBINATION MOTOR-STARTERS THE CONTROL TRANSFORMERS IN ALL COMBINATION MOTOR-STARTERS SHALL HAVE 120 VOLT COILS.

FIRE PROTECTION

71. OPENINGS IN FIRE RATED ASSEMBLIES FOR ELECTRICAL CONDUIT, BUS DUCT, AND OTHER EQUIPMENT SHALL BE SEALED WITH FIRE CAULK OR OTHER MATERIAL SUITABLE FOR MAINTAINING THE INTEGRITY OF THE FIRE RATING. SEE CONSTRUCTION NOTE #39 FOR ADDITIONAL REQUIREMENTS.

BUS DUCT

72. NOT USED.

DIMENSIONS

73. MEASUREMENTS, WHERE SHOWN, ARE FROM FACE OF METAL FRAMING TO CENTER OF THE BOX. ALL DIMENSIONS SHALL BE VERIFIED WITH THE GENERAL CONTRACTOR AND OWNER PRIOR TO INSTALLATION.

ADA REQUIREMENTS

74. RECEPTACLE OUTLETS SHALL BE LOCATED NOT LESS THAN 15 INCHES ABOVE THE FLOOR TO THE BOTTOM OF THE OPERABLE PART.

75. LIGHT SWITCHES SHALL BE INSTALLED WITH THE TOP OF THE OPERABLE PART TO BE WITHIN 34-46 INCHES OF THE FLOOR.

76. ALL WORK MUST COMPLY WITH THE MOST RECENT ADA STANDARDS, HUD REQUIREMENTS AND CBC REQUIREMENTS FOR ACCESSIBLE AND ADAPTABLE UNITS.

77. PLACEMENT OF ALL OUTLETS AND CONTROL DEVICES SHALL BE COORDINATED WITH THE GENERAL CONTRACTOR, ARCHITECT AND AUTHORITY HAVING JURISDICTION AT ROUGH IN AND PRIOR TO THE INSTALLATION OF RACEWAYS OR CABLING.

78. IT IS THE CONTRACTOR'S SOLE RESPONSIBILITY TO VERIFY THE PLACEMENT AND LOCATION OF ALL ELECTRICAL EQUIPMENT TO MEET THESE REQUIREMENTS PRIOR TO THE INSTALLATION OF RACEWAYS OR CABLING. THERE SHALL BE NO ALLOWANCES MADE FOR FAILURE TO COMPLY WITH THESE NOTES.

ELECTRICAL SERVICE NOTES

1. REFER TO SCE DRAWING FOR NEW SERVICE FOR NEW COMPLETE INSTALLATION REQUIREMENTS.
2. ALL SERVICE CONDUIT SWEEPS AND BENDS SHALL BE SCHEDULE 80 PVC.
3. ALL SERVICE CONDUIT SHALL BE MANDRELED AND CLEANED WITH APPROVED PULLROPES INSTALLED.
4. CONTACT SCE INSPECTION AT LEAST 48 HOURS BEFORE CONSTRUCTION TO SCHEDULE INSPECTION AND OBTAIN "UGS" INSTALLATION DRAWINGS.
5. CONTACT UNDERGROUND SERVICE ALERT FOR UNDERGROUND LOCATING AT 800-422-4133 OR 800-227-2600 A MINIMUM OF 2 WORKING DAYS PRIOR TO DIG.
6. SUBMIT SHOP DRAWINGS OF ALL PROPOSED SERVICE EQUIPMENT TO SCE FOR APPROVAL PRIOR TO ORDERING.

CATV COMMUNICATIONS SPECIFICATIONS FOR UNDERGROUND SERVICE FEED:

1. CONTACT CATV SERVICE PLANNER PRIOR TO THE START OF CONSTRUCTION FOR ALL REQUIREMENTS AND INSPECTIONS.
2. PVC CONDUIT SCHEDULE 40 (NON-CORRUGATED) OR EQUIVALENT.
3. CONDUIT TO BE PLACED FROM CATV PULLBOX, OR UTILITY POLE (AS MARKED BY CATV REPRESENTATIVE) TO THE HOUSE TO BE CONTIGUOUS WITH NO MORE THAN TWO 90 DEGREE BENDS OR COMBINATION OF BENDS TOTALING 180 DEGREES.
4. CONDUIT WILL BE BURIED TO A MINIMUM COVERED DEPTH OF 36" FROM FINAL GRADE ON PRIVATE PROPERTY. MINIMUM OF 12" SEPARATION FROM POWER WHEN IN JOINT TRENCH.
5. ALL CONDUIT BENDS SHALL GIVE A MINIMUM RADIUS OF 24".
6. 1/4" POLYPROPYLENE PULL LINE OR EQUIVALENT REQUIRED IN ALL CATV CONDUITS.
7. ALL CONDUITS SHALL BE LEFT CLEAN, DRY AND FREE OF DEBRIS OR ANY OTHER OBSTRUCTIONS. UNUSABLE CONDUITS SHALL BE REPLACED AT THE DEVELOPERS/OWNERS EXPENSE.
8. PROVIDE AND PLACE AN INSULATED #6 SOLID COPPER GROUND WIRE FROM THE PREWIRE LOCATION TO THE ELECTRICAL GROUND SOURCE, PROVIDING A COMMON BOND WITH A SEPARATE CLAMP. CLAMP IS TO BE ACCESSIBLE. THIS GROUND WIRE IS TO BE INSTALLED BY DEVELOPER'S LICENSED ELECTRICAL CONTRACTOR. (SEE NEC ARTICLE 250-81a OR c, 250-8cm, 250-117) . APPLICATIONS WITH 7 OR MORE SERVICES WILL REQUIRE A 4'X4'x 3/4" BACKBOARD.

UNDERGROUND INSTALLATION NOTE

1. ELECTRICAL CONTRACTOR SHALL EXERCISE EXTREME CAUTION IN EXCAVATING AND TRENCHING ON THIS SITE TO AVOID EXISTING CONDUITS, PIPING AND DUCTS, ETC. AND TO PREVENT HAZARD TO PERSONNEL AND DAMAGE TO EXISTING UNDERGROUND UTILITIES OR STRUCTURES. THE ENGINEER IS NOT RESPONSIBLE FOR THE LOCATION OF UNDERGROUND UTILITIES OR STRUCTURES WHETHER OR NOT SHOWN OR DETAILED AND INSTALLED BY THIS OR ANY OTHER CONTRACTS. THE CONTRACTOR SHALL IMMEDIATELY NOTIFY THE OWNER SHOULD SUCH UNIDENTIFIED CONDITIONS BE DISCOVERED. THESE DRAWINGS AND SPECIFICATIONS DO NOT INCLUDE NECESSARY COMPONENTS FOR CONSTRUCTION SAFETY.

ARTICLE 300 — GENERAL REQUIREMENTS FOR WIRING METHODS AND MATERIALS (300.5)

TABLE 300.5 MINIMUM COVER REQUIREMENTS, 0 TO 1000 VOLTS, NOMINAL, BURIAL IN MILLIMETERS (INCHES)

TYPE OF WIRING METHOD OR CIRCUIT

LOCATION OF WIRING METHOD OR CIRCUIT	COLUMN 1 DIRECT BURIAL CABLES OR CONDUCTORS		COLUMN 2 RIGID METAL CONDUIT OR INTERMEDIATE METAL CONDUIT		COLUMN 3 NONMETALLIC RACEWAYS LISTED FOR DIRECT BURIAL WITHOUT CONCRETE ENCASEMENT OR OTHER APPROVED RACEWAYS		COLUMN 4 RESIDENTIAL BRANCH CIRCUITS RATED 120 VOLTS OR LESS WITH GFCI PROTECTION AND MAXIMUM OVERCURRENT PROTECTION OF 20 AMPERES		COLUMN 5 CIRCUITS FOR CONTROL OF IRRIGATION AND LANDSCAPE LIGHTING LIMITED TO NOT MORE THAN 30 VOLTS AND INSTALLED WITH TYPE UF OR IN OTHER IDENTIFIED CABLE OR RACEWAY	
	mm.	in.	mm.	in.	mm.	in.	mm.	in.	mm.	in.
ALL LOCATIONS NOT SPECIFIED BELOW	600	24	150	6	450	18	300	12	150	6
IN TRENCH BELOW 50 mm (2 in.) THICK CONCRETE OR EQUIVALENT	450	18	150	6	300	12	150	6	150	6
UNDER A BUILDING	0	0	0	0	0	0	0	0	0	0
	(IN RACEWAY OR TYPE MC OR TYPE MI CABLE IDENTIFIED FOR DIRECT BURIAL)						(IN RACEWAY OR TYPE MC OR TYPE MI CABLE IDENTIFIED FOR DIRECT BURIAL)		(IN RACEWAY OR TYPE MC OR TYPE MI CABLE IDENTIFIED FOR DIRECT BURIAL)	
UNDER MINIMUM OF 102 mm (4 in.) THICK CONCRETE EXTERIOR SLAB WITH NO VEHICULAR TRAFFIC AND THE SLAB EXTENDING NOT LESS THAN 152 mm (6 in.) BEYOND THE UNDERGROUND INSTALLATION	450	18	100	4	100	4	150	6	150	6
							(DIRECT BURIAL)		(DIRECT BURIAL)	
							100	4	100	4
							(IN RACEWAY)		(IN RACEWAY)	
UNDER STREETS, HIGHWAYS, ROADS, ALLEYS, DRIVEWAYS, AND PARKING LOTS	600	24	600	24	600	24	600	24	600	24
ONE- AND TWO-FAMILY DWELLING DRIVEWAYS AND OUTDOOR PARKING AREAS, AND USED ONLY FOR DWELLING-RELATED PURPOSES	450	18	450	18	450	18	300	12	450	18
IN OR UNDER AIRPORT RUNWAYS, INCLUDING ADJACENT AREAS WHERE TRESPASSING PROHIBITED	450	18	450	18	450	18	450	18	450	18

Notes:
1. Cover is defined as the shortest distance in millimeters (inches) measured between a point on the top surface of any direct-buried conductor, cable, conduit, or other raceway and the top surface of finished grade, concrete, or similar cover.
2. Raceways approved for burial only where concrete encased shall require concrete envelope not less than 50 mm (2 in.) thick.
3. Lesser depths shall be permitted where cables and conductors rise for terminations or splices or where access is otherwise required.
4. Where one of the wiring method types listed in Columns 1 through 3 is used for one of the circuit types in Columns 4 and 5, the shallowest depth of burial shall be permitted.
5. Where solid rock prevents compliance with the cover depths specified in this table, the wiring shall be installed in metal or nonmetallic raceway permitted for direct burial. The raceways shall be covered by a minimum of 50 mm (2 in.) of concrete extending down to rock.

FIRST SUBMITTAL 08.21.19

G K A ARCHITECTS

BUILDING ALTERATIONS

THOUSAND OAKS COMMUNITY CENTER
CHILDREN'S RESTROOM
2525 MOORPARK RD.,
THOUSAND OAKS, CA 91362

CLIENT: CONEJO RECREATION & PARK DISTRICT

Architect
G. Korn, AIA
GKA Architects
1301 N La Brea Ave
Inglewood, CA 90302
gkorn@gka-arc.com

A & N DESIGN GROUP
MECHANICAL- PLUMBING- ELECTRICAL
21550 OXNARD STREET #300
WOODLAND HILLS, CA 91367
TEL: (818)-258-4361
FAX: (818)-758-0057

REGISTERED PROFESSIONAL ENGINEER
AMIR A MIRIRA-ZAVIAN
No. E20918
Exp. 09/30/20
ELECTRICAL
STATE OF CALIFORNIA

No.	Description	Date

Project number	
Date	08.21.19
Drawn by	AN
Checked by	AN
Drawing Name	CONSTRUCTION NOTES
Drawing No.	E0.01
NOTE: DO NOT SCALE DRAWINGS Scale	-

ELECTRICAL SPECIFICATIONS

THESE SPECIFICATIONS ARE BASED UPON THE 2017 NEC. THE CODE(S) ADOPTED BY THE AUTHORITY HAVING JURISDICTION SUPERCEDE THE SECTIONS LISTED BELOW BUT ONLY IF THOSE REQUIREMENT(S) ARE MORE STRINGENT.

1. INTENT

1.1. THESE PLANS, AND ALL ASSOCIATED DOCUMENTS, ARE CONSIDERED TO BE CONTRACT DOCUMENTS AND AS SUCH, CANNOT BE AMENDED OR MODIFIED WITHOUT THE PRIOR WRITTEN CONSENT OF MEP CONSULTING.

1.2. FURNISH AND INSTALL A COMPLETE AND OPERATIONAL ELECTRICAL SYSTEM IN ACCORDANCE WITH PLANS AND SPECIFICATIONS.

1.3. ALL DRAWINGS ARE SCHEMATIC BY DESIGN AND THE REQUIRED INSTALLATION SHALL NOT BE LIMITED TO WHAT IS DEPICTED HEREIN. ALL APPURTENANCES REQUIRED TO PROVIDE A COMPLETE AND OPERATIONAL SYSTEM MUST BE INCLUDED IN THE CONTRACTORS BID AND WORK.

1.4. WHEREVER USED IN THESE DOCUMENTS THE WORD OR TERM "SHALL" IS TO BE INTERPRETED AS FOLLOWS: MANDATORY LANGUAGE AND IS WITHOUT EXCEPTION.

2. GENERAL

2.1. THE CONTRACTOR SHALL VISIT THE JOB SITE TO FAMILIARIZE HIMSELF WITH ALL EXISTING CONDITIONS WHICH MAY AFFECT THEIR BID OR WORK. NO ALLOWANCES WILL BE MADE FOR EXISTING CONDITIONS OR THE CONTRACTORS FAILURE TO ACCOMMODATE EXISTING CONDITIONS ON ANY BID.

2.2. IT IS THE CONTRACTORS RESPONSIBILITY TO OBTAIN CLARIFICATION OF ANY APPARENT CONFLICT OR INCONSISTENCY IN THE DRAWINGS, SPECIFICATIONS OR DESIGN PRIOR TO THEIR BID IN WRITING FROM THE ENGINEER. OTHERWISE THE CONTRACTOR ACCEPTS FULL RESPONSIBILITY TO CORRECT (AT THEIR COST) ANY SUCH ITEMS AS NECESSARY TO MEET THE INTENT OF THESE DOCUMENTS AND ANY ADOPTED CODE OR NATIONAL STANDARD AS INTERPRETED BY THE ENGINEER.

2.3. ALL MATERIAL AND WORKMANSHIP SHALL CONFORM TO THE MOST RECENT EDITIONS OF THE NATIONAL ELECTRIC CODE (NEC), UBC., IBC, ICC, IECC AND ANY APPLICABLE CITY AND/OR STATE CODES AND ORDINANCES, THE AMERICANS WITH DISABILITIES ACT, E.P.A. REGULATIONS (INCLUDING EPACT 1992), ANSI STANDARDS, UL STANDARDS AS WELL AS ANY AND ALL UTILITY COMPANY REQUIREMENTS. THE FOREGOING CODES AND REGULATIONS ARE REQUIREMENTS AND ARE INCORPORATED IN THIS SPECIFICATION FOR THIS WORK BY REFERENCE. ALL INSTALLATIONS BY THE CONTRACTOR SHALL MEET LATEST ADOPTED CODES WITHOUT EXCEPTION.

2.4. THE CONTRACTOR SHALL COORDINATE AND PROVIDE INFORMATION AS REQUIRED TO ALL SERVING UTILITIES IN A TIMELY MANNER AND IS NECESSARY TO PROVIDE THE SERVICE REQUIRED AND MEET UTILITY REQUIREMENTS. IMMEDIATE COORDINATION WILL BE REQUIRED FOR MOST PROJECTS. FIELD COORDINATE ALL REQUIREMENTS PRIOR TO TRENCHING.

2.5. REFER TO ARCHITECTURAL, MECHANICAL, CIVIL, STRUCTURAL DRAWINGS AND/OR EQUIPMENT SUPPLIERS DRAWINGS AND SPECIFICATIONS FOR EXACT EQUIPMENT LOCATIONS, LOADS AND ADDITIONAL REQUIREMENTS. REPRESENTATIONS OF THE WORK SPECIFIC TO THE OTHER DISCIPLINES IS SHOWN ON THE ELECTRICAL DRAWINGS FOR CONVENIENCE ONLY AND SHALL NOT SOLELY BE RELIED UPON FOR THE PLACEMENT OF EQUIPMENT.

2.6. THE CONTRACTOR ASSUMES RESPONSIBILITY FOR ALL EQUIPMENT THEY SUPPLY. ALL EQUIPMENT SHALL BE INSTALLED STRICTLY PER MANUFACTURES RECOMMENDATIONS, THE LISTING OF THE EQUIPMENT AND ALL CODES. OTHERWISE THE CONTRACTOR ASSUMES RESPONSIBILITY (AT THEIR COST) TO CORRECT AND REMEDY ANY INSTALLATION NOT IN COMPLIANCE WITH THE MANUFACTURES RECOMMENDATIONS, LISTING(S) AND INTENTIONS AS INTERPRETED BY THE ENGINEER. SEE SECTION 2.3.

2.7. THE CONTRACTOR SHALL NOT ENGAGE IN THE RE-DESIGN OR "VALUE ENGINEERING" OF THIS PROJECT WITHOUT PRIOR WRITTEN APPROVAL FROM MEP CONSULTING AND THE OWNER. ALL DEVIATIONS FROM THESE DOCUMENTS ARE REQUIRED TO BE APPROVED OF IN WRITING BY THE ENGINEER PRIOR TO INSTALLATION. THE ELECTRICAL CONTRACTOR IS SOLELY RESPONSIBLE FOR ALL COSTS ASSOCIATED WITH ANY DEVIATION FROM THESE DOCUMENTS INCLUDING THE COST TO RE-DESIGN. ELECTRICAL CONTRACTOR, AT COMMENCEMENT OF WORK, ACCEPTS ALL REQUIREMENTS AND STIPULATIONS OUTLINED IN THE PROPOSAL PROVIDED BY MEP CONSULTING AND ACCEPTED BY THE PERSON IN RESPONSIBLE CHARGE OF THE PROJECT. ADDITIONALLY A DETAILED ACCOUNTING OF ANY DEVIATIONS MUST BE SUBMITTED TO MEP CONSULTING AND THE OWNER PRIOR TO COMMENCEMENT OF WORK FOR APPROVAL.

2.8. ANY VARIANCE OR EXCEPTIONS TO THE DRAWINGS AND SPECIFICATIONS MUST BE REQUESTED AND APPROVED IN WRITING. INTERIM VERBAL APPROVALS WILL ONLY BE PROVIDED WHEN THE ENGINEER DETERMINES THIS TO BE JUSTIFIED AND MUST BE CONFIRMED IN WRITING TO BE FINAL. ROUTE ALL RFI's, AND RFC's VIA GENERAL CONTRACTOR AND THROUGH THE ARCHITECT.

2.9. THE CONTRACTOR IS RESPONSIBLE TO OBTAIN ALL NECESSARY PERMITS, VARIANCES, AND APPROVALS, ETC. (AT THEIR COST) WHICH MAY BE REQUIRED FOR COMPLETION OF THIS WORK.

2.10. PRIOR TO ROUGH-IN, THE ELECTRICAL CONTRACTOR SHALL COORDINATE THE EXACT LOCATION OF ALL LIGHT FIXTURES AND WIRING DEVICES: TO INCLUDE MOUNTING HEIGHT AND LOCATIONS. ALL CONFLICTS SHALL BE REPORTED TO THE ENGINEER/ARCHITECT. PRIOR TO ROUGH-IN. FAILURE TO COORDINATE WILL REQUIRE THE CONTRACTOR TO FIX ERRORS AT HIS COST.

2.11. THE ELECTRICAL CONTRACTOR SHALL PROVIDE EQUIPMENT AND SUPPORT FOR PROGRESS AND FINAL INSPECTIONS. THIS INCLUDES COMPLETE ACCESS TO ALL EQUIPMENT. ADDITIONALLY A COMPLETE SET OF SPARE FUSES FOR ALL FUSES USED AND A 10% SUPPLY OF ALL LIGHT BULBS PROVIDED IN FIXTURES (TO A MAXIMUM OF (1) CASE FOR EACH STYLE) SHALL BE PROVIDED TO THE OWNER AT FINAL INSPECTION.

3. RECONSTRUCTION (TO INCLUDE TENANT IMPROVEMENTS)

3.1. ALL RECONSTRUCTION OF EXISTING FACILITIES AND EQUIPMENT SHALL REQUIRE COMPLETE RENOVATION (MAKE GOOD AS NEW) FOR ALL EXISTING EQUIPMENT UPON WHICH WORK IS INCLUDE THESE FOLLOWING REQUIREMENTS:

3.1.1. VERIFICATION OF EXISTING SES GROUNDING COMPLIANCE WITH NEC ARTICLE 250.

3.1.2. VERIFICATION OF CABLE SIZE AND AMPACITY OF EXISTING FEEDERS AND BRANCH CIRCUITS WITH NEC TABLE 310.15.

3.1.3. VERIFICATION OF EQUIPMENT GROUNDING CONDUCTORS PER NEC TABLE 250.122 AND GROUNDING AND BONDING OF LINE SIDE EQUIPMENT PER NEC TABLE 250.66.

3.1.4. VERIFICATION OF GROUNDING ELECTRODE SYSTEMS, ALL SYSTEM BONDING JUMPERS AND MAIN BONDING JUMPERS PER NEC ARTICLE 250.

3.1.5. VERIFICATION OF THE INTEGRITY OF THE GROUNDING AND BONDING SYSTEM AND VERIFY COMPLIANCE WITH NEC 250.4.

3.1.6. EXISTING LIGHT FIXTURES TO BE REUSED MUST BE CLEANED, RE-LAMPED, AND RESTORED TO "LIKE NEW" CONDITION.

3.1.7. EXISTING PANEL BOARDS, SWITCH BOARDS, AND TRANSFORMERS WHICH ARE INCLUDED IN THIS PROJECT SHALL HAVE PREVENTATIVE MAINTENANCE PREFORMED TO INCLUDE VERIFICATION OF ALL TERMINATIONS AS WELL AS CLEANING AND INSPECTION.

3.1.8. VERIFY PROPER WORKING CONDITION OF ALL EXISTING EMERGENCY FIXTURES AND EXIT SIGNS. REPAIR OR REPLACE AS REQUIRED.

3.2. IN THE EVENT THAT INSPECTION REVEALS DISCREPANCIES AND/OR NON-COMPLIANCE, THE OWNER AND THE ENGINEER SHALL BE NOTIFIED IN WRITING BEFORE MAKING ALL REQUIRED CORRECTIONS..

4. MATERIALS AND METHODS

4.1. THE USE OF ELECTRICAL METALLIC TUBING (EMT) IS ACCEPTABLE IN ACCORDANCE WITH NEC ARTICLE 358. EMT FITTINGS SHALL BE COMPRESSION TYPE OR SET SCREW TYPE. EMT SHALL BE PROVIDED WITH A AN ADDITIONAL COPPER GROUND WIRE SIZED PER NEC 250.122. MINIMUM TRADE CONDUIT SIZE SHALL BE 1/2". ALL HOME RUNS SHALL BE 3/4" TRADE SIZED EMT.

4.2. ALL CONDUITS INSTALLED UNDERGROUND SHALL HAVE PVC COATED G.R.C. ELBOWS NO EXCEPTIONS.

4.3. WHERE SYSTEMS FURNITURE IS INDICATED, THE MINIMUM NEUTRAL CONDUCTOR SIZE SHALL BE #10 A.W.G. COPPER.

4.4. CONDUCTORS SHALL BE 600V COPPER (98% CONDUCTIVITY). MINIMUM LINE VOLTAGE WIRE SIZE IS #12 A.W.G. ALL CONDUCTORS SHALL HAVE 90 DEGREE RATED INSULATION.

4.5. CONDUCTORS #6 AND SMALLER SHALL HAVE THHN/THHW-2 INSULATION. #4 AND LARGER SHALL HAVE XHHW-2 INSULATION.

4.6. ALL WIRING DEVICES SHALL BE MINIMUM 20 AMP SPECIFICATION GRADE. HUBBELL, LEVITON, AND PASS-SEYMORE ARE ACCEPTABLE EQUIVALENTS. ALL OUTLETS, SWITCHES, SPECIAL RECEPTACLES AND GROUND FAULT PROTECTION DEVICES SHALL BE PERMANENTLY MARKED WITH ENGRAVED COVER PLATES, STATING PURPOSE, CIRCUIT AND SOURCE PANEL AND VOLTAGE.

4.7. COVER PLATES SHALL BE NYLON (IVORY) IN OFFICE/COMMERCIAL/OR LIVING AREAS, AND GALVANIZED STEEL IN WAREHOUSE/INDUSTRIAL/MANUFACTURING AREAS OR AREAS SUBJECT TO PHYSICAL ABUSE. INDUSTRIAL COVERS ARE REQUIRED FOR ALL MOUNTING APPLICATIONS.

4.8. ALL RACEWAYS AND CABLES ARE TO BE CONCEALED EXCEPT TO SURFACE MOUNTED PANELS AND AT THE CEILING OF EXPOSED STRUCTURE AREAS. CONDUITS WILL BE RUN PARALLEL OR PERPENDICULAR TO BUILDING LINES.

4.9. THE USE OF MC CABLE IS ACCEPTABLE IN ACCORDANCE WITH NEC ARTICLE 330, BUT LIMITED TO USE FOR BRANCH CIRCUITS ONLY. MC CABLE MAY NOT BE USED FOR HOME RUNS, WHERE SUBJECT TO PHYSICAL DAMAGE, IN DIRECT BURIAL (IN EARTH OR CONCRETE) SITUATION UNLESS UL LISTED AND SUITABLE FOR THE APPLICATION. MC CABLE MAY NOT BE RUN EXPOSED.

4.10. P.V.C. CONDUIT MAY BE USED ONLY IN OR UNDER SLABS AND IN CONCRETE OR MASONRY WALLS. INSTALLATIONS BELOW GRADE SHALL BE BURIED 24" (MIN) DEEP OR GREATER.

4.11. FUSES SHALL BE BUSSMAN, LITTLE FUSES, GOULD-SHAWMUT OR ENGINEER APPROVED EQUAL.

4.12. CONDUCTORS UP TO AND INCLUDING #10 AWG SHALL BE SOLID WITH CONTINUOUSLY COLOR CODED INSULATION. COLOR CODING SHALL COMPLY WITH THE NEC AND/OR LOCAL CODES OR POLICIES.

4.13. CONDUCTORS #8 AWG AND #6 AWG SHALL BE STRANDED WITH CONTINUOUS COLOR CODED INSULATION. COLOR CODING SHALL COMPLY WITH THE NEC AND/OR LOCAL CODES OR POLICIES.

4.14. SPLICING OF GROUNDING ELECTRODE CONDUCTORS, WATER AND BUILDING STEEL BONDS SHALL ONLY BE ALLOWED WITH EXOTHERMIC WELDING.

4.15. NEW CONDUCTORS SHALL BE CONTINUOUS AND WITHOUT SPLICE EXCEPT AT JUNCTION OR PULL BOXES.

4.16. ALL CONDUIT SUPPORT SYSTEMS SHALL BE INSTALLED ON THE BUILDING STRUCTURE. UNISTRUT, BEELINE, OR CADDY MOUNTING SYSTEMS ARE ACCEPTABLE. NO CONDUIT OR CABLE WILL BE SUPPORTED BY WIRES UTILIZED TO SUPPORT SUSPENDED CEILINGS OR BY "SLACK" WIRES USED AT LUMINAIRES OR AIR TERMINALS. PERFORATED STRAPS OR OTHER PIPING AND CONDUIT STRAPS ARE NOT ACCEPTABLE SUPPORTS.

4.17. ACCEPTABLE MANUFACTURES FOR SWITCH GEAR RELATED COMPONENTS ARE: SQUARE D, CHALLENGER, GENERAL ELECTRIC, SIEMENS, AND CUTLER-HAMMER.

4.18. CONDUCTORS SHALL BE COLOR CODED FOR BRANCH CIRCUITS IN ACCORDANCE WITH THE NEC AND LOCAL REQUIREMENTS. CONDUCTORS SHALL BE IDENTIFIED AS FOLLOWS EXCEPT AS AMENDED BY LOCAL AMENDMENTS:

- 120/240 VOLT SINGLE PHASE: UNGROUNDED CONDUCTORS A-PHASE; BLACK, B-PHASE; RED, GROUNDED CONDUCTOR; WHITE.
- 120/208 VOLT THREE PHASE GROUNDED AND UNGROUNDED SYSTEMS: UNGROUNDED CONDUCTORS, A-PHASE; BLACK, B-PHASE; RED, C-PHASE; BLUE, GROUNDED CONDUCTOR; WHITE (WHERE USED).
- 120/240 VOLT THREE PHASE GROUNDED AND UNGROUNDED SYSTEMS: UNGROUNDED CONDUCTORS, A-PHASE; BLACK, B-PHASE; ORANGE, C-PHASE; BLUE, GROUNDED CONDUCTOR; WHITE.
- 277/480 VOLT THREE PHASE GROUNDED AND UNGROUNDED SYSTEMS: UNGROUNDED CONDUCTORS, A-PHASE; BROWN, B-PHASE; ORANGE, C-PHASE; YELLOW, GROUNDED CONDUCTOR; GRAY.
- EQUIPMENT GROUNDING OR BONDING CONDUCTORS SHALL BE GREEN OR BARE. ISOLATED GROUNDING CONDUCTORS SHALL BE GREEN WITH A YELLOW STRIPE.

4.19. INSTALLATIONS FOR EQUIPMENT SUBJECT TO VIBRATION, SUCH AS MOTORS AND TRANSFORMERS, SHALL HAVE CONDUCTORS INSTALLED IN 'SEAL TIGHT' OR LIQUID TIGHT FLEXIBLE CONDUIT WITH GASKETED CONNECTORS AND FITTINGS.

4.20. PROVIDE RUBBER VIBRATION DAMPENING PADS FOR ALL MOTORS AND TRANSFORMERS, AND ALL VIBRATION PRODUCING EQUIPMENT.

4.21. ALL CONDUITS, RACEWAYS AND CABLES, REGARDLESS OF VOLTAGE, SHALL HAVE AN INSULATED BOND WIRE, SIZED BY EITHER NEC TABLE 250.66 (LINE SIDE) OR 250.122 (LOAD SIDE), WHERE APPLICABLE, INSTALLED AND PROPERLY TERMINATED WITH THE PHASE CONDUCTORS. CONDUIT IS NOT AN ACCEPTABLE GROUNDING OR BONDING METHOD PER THESE DOCUMENTS.

4.22. ALL DIMMERS AND DIMMER SWITCHES SHALL BE OF THE SLIDE TYPE AND RATED FOR CONTINUOUS DUTY OF 1000 WATTS MINIMUM. THE CONTRACTOR SHALL VERIFY IN THE FIELD, THE ACTUAL LOAD OF THE LIGHTING (SPECIFICALLY, BUT NOT LIMITED TO, TRACK LIGHTING) AND INSTALL DIMMERS OF PROPER WATTAGE.

4.23. ELECTRICAL CONTRACTOR SHALL IDENTIFY ALL CIRCUIT NUMBERS AT JUNCTION, OUTLET, SWITCH OR PULL BOXES WITH PERMANENT MARKER ON THE INSIDE OF THE BOX COVER OR TRIM PLATE.

5. SUBMITTALS

5.1. SUBMIT 6 SETS OF SHOP DRAWINGS AND SAMPLES FOR ALL EQUIPMENT PRIOR TO ORDERING AND IN A TIMELY MANNER. SUBMITTALS SHALL INCLUDE LIGHT FIXTURES (INCLUDING LIGHT POLES), SWITCHBOARDS, PANELBOARDS, STARTERS, HVAC ELECTRICAL EQUIPMENT AND TRANSFORMERS. DESIGN BUILD ARE EXEMPT FROM SUBMITTAL REQUIREMENTS.

5.1.1. SHOP DRAWINGS SHALL INCLUDE LAYOUT DIMENSIONS AND IDENTIFICATION OF SPECIFIC EQUIPMENT FOR INSTALLATION, MINIMUM NEC CLEARANCES (E.G. 110.26) SHALL BE INDICATED.

5.1.2. THE CONTRACTOR SHALL INCLUDE COMPARISON DATA AND SAMPLES FOR BOTH THE SUBSTITUTE AND SPECIFIED ITEMS WHEN SUBSTITUTIONS ARE PROPOSED. THE CONTRACTOR REMAINS RESPONSIBLE TO PROVIDE THE ORIGINALLY SPECIFIED EQUIPMENT IN ACCORDANCE WITH THE ORIGINAL DELIVERY DATE (AT THEIR COST) WHEN SUBSTITUTIONS ARE NOT APPROVED.

5.2. THE CONTRACTOR SHALL PROVIDE PROOF OF PERFORMANCE BOND WITH HIS INITIAL SUBMITTALS (E.G. SHOP DRAWINGS) TO INCLUDE A WARRANTY FOR THE WARRANTY PERIOD (2 YEARS).

5.3. THE CONTRACTOR SHALL SUBMIT COMPLETE AND ACCURATE "AS BUILT" DRAWING TO THE OWNER AND ENGINEER WITHIN 2 WEEKS OF OWNER ACCEPTANCE. PROVIDE (4) SETS OF BLUE LINES OR REPRODUCIBLE OF SAID PLANS.

5.4. PROVIDE A LETTER TO THE OWNER AND ENGINEER CERTIFYING ALL EQUIPMENT AND TERMINATION'S ARE TORQUED PER THE LISTING OF THE EQUIPMENT. THIS CERTIFICATION SHALL BE EXECUTED BY A LICENSED CONTRACTOR, AND WRITTEN CERTIFICATION PROVIDED ON COMPANY LETTERHEAD.

5.5. PROVIDE COPIES OF ALL MANUFACTURER/SUPPLIER WARRANTIES AND GUARANTEES TO THE OWNER WITHIN 2 WEEKS OF FINAL ACCEPTANCE BY THE OWNER.

6. TESTING

6.1. SUBMIT A COPY OF ALL TEST RESULTS FOR THE ELECTRICAL POWER DISTRIBUTION SYSTEM AS A COMPLETE PACKAGE TO THE OWNER AND ENGINEER. PACKAGE MUST PROVIDE SPECIFIC VALUES OF TEST DATA OBTAINED AGAINST ACCEPTANCE CRITERIA (SIMPLE PASS/FAIL ALONE IS INADEQUATE). TESTING PERSONAL SHALL BE CERTIFIED BY INTERNATIONAL ELECTRIC TESTING ASSOCIATION (NETA) OR NATIONAL INSTITUTE FOR CERTIFICATION IN ENGINEERING TECHNOLOGIES (NICET).

6.2. GROUNDING SYSTEM FALL-OF-POTENTIAL (RESISTANCE TO GROUND) SHALL PROVIDE LESS THAN 25 OHMS RESISTANCE TO GROUND AND LESS THAN .5 OHMS POINT TO POINT BETWEEN THE MAIN GROUNDING ELECTRODE SYSTEM AND MAJOR ELECTRICAL EQUIPMENT FRAMES, SYSTEM NEUTRAL, AND/OR DERIVED NEUTRAL POINTS. (REF IEEE STANDARD 81-1991 AND 142). SHALL NOT BE PERFORMED WITHIN 96 HOURS OF RAIN FALL.

6.3. OVER POTENTIAL (HIGH POTENTIAL) TESTING ON BUSSES GREATER THAN 1000 AMPS (OR MODIFICATION OF SERVICES) GREATER THAN 400 AMPS AND EACH PHASE TO GROUND IN ACCORDANCE WITH SWITCH GEAR / SWITCH BOARD MANUFACTURES RECOMMENDATIONS FOR ONE MINUTE. THE INSULATION SHALL WITHSTAND THE OVER POTENTIAL TEST VOLTAGE APPLIED.

6.4. GROUND-FAULT PROTECTION SYSTEM SHALL BE TESTED USING PRIMARY INJECTION FOR PICK UP TESTS. RELAY TIMING SHALL BE IN ACCORDANCE WITH MANUFACTURERS SPECIFICATIONS.

6.5. PROVIDE TWO COPIES OF ACCEPTANCE OF FIRE ALARM SYSTEM BY LOCAL FIRE AUTHORITY.

6.6. INSULATION RESISTANCE (MEGGER) (AC AND DC (1000v) FOR ONE MINUTE) SHALL PROVIDE 50 MEGOHMS OR GREATER. TESTING MAY BE PERFORMED BY CONTRACTOR, WITH WRITTEN CERTIFICATION BY LICENSED CONTRACTOR.

7. WARRANTY

7.1. THE CONTRACTOR SHALL GUARANTEE ALL MATERIALS AND WORKMANSHIP FURNISHED BY THEM UNDER THIS CONTRACT FOR A PERIOD OF (2) YEARS FROM THE DATE OF FINAL ACCEPTANCE OF THE WORK BY THE OWNER. ANY DEFECTS DEVELOPING DURING THE WARRANTY PERIOD TRACEABLE TO MATERIALS OR WORKMANSHIP SHALL BE CORRECTED AT THE CONTRACTORS EXPENSE.

7.2. THE ENGINEER AND OWNER RETAIN THE RIGHT TO REQUIRE REMOVAL AND INSTALLATION OF ANY MATERIAL OR EQUIPMENT NOT IN COMPLIANCE WITH THE PROVISIONS AND STANDARDS OF THESE DRAWINGS AND SPECIFICATIONS. NO CLAIM FOR ADDITIONAL COMPENSATION WILL BE ALLOWED FOR WORK PERFORMED IN THIS REGARD.

7.3. THE CONTRACTOR AGREES TO TRANSFER ALL MANUFACTURERS/SUPPLIERS WARRANTIES AND GUARANTEES TO THE OWNER. THIS INCLUDES COMPLETION OF ALL DOCUMENTATION FOR THE MANUFACTURER/SUPPLIER.

8. SERVICE

8.1. PROVIDE AND INSTALL NEW SERVICE SECTION AS SHOWN ON DRAWINGS. SES SHALL BEAR U.L. LABEL, HAVE COPPER BUSSING - SILVER PLATED AND AMPERAGE RATING AS SHOWN ON DRAWINGS. METERING AND PRIMARY PULL SECTION SHALL BE BARRIERED FROM OTHER WORK AND APPROVED BY BOTH THE LOCAL UTILITY COMPANY AND AUTHORITY HAVING JURISDICTION.

8.2. GROUND FAULT PROTECTION SHALL BE PROVIDED FOR SERVICES RATED 150 VOLTS TO GROUND OR GREATER ON ALL SERVICE DISCONNECTS GREATER THAN 1000A.

8.3. GROUND FAULT PROTECTION ON MAINS AND SUB-MAINS MUST HAVE AUDIBLE/VISIBLE ALARMS.

8.4. ENCLOSURES SHALL MEET UL & PUBLIC UTILITY REQUIREMENTS BARRIERED BETWEEN SECTIONS, LINE AND LOAD, BOTH BARRIERED.

8.5. NO COVERS GREATER THAN 1/3 HEIGHT OF EQUIPMENT.

8.6. FULL SIZED NEUTRAL BUSSING AND NON-TAPERED BUSSING WILL BE STANDARD. ALL SPACE WILL BE FULLY BUSSED FOR FUTURE. ALL BUSSING WILL BE PHYSICALLY BARRIERED.

8.7. ENCLOSURES SHALL MEET UL & PUBLIC UTILITY REQUIREMENTS BARRIERED BETWEEN SECTIONS, LINE AND LOAD, BOTH BARRIERED.

8.8. ALL SERVICES SHALL BE PROVIDED WITH A PERMANENTLY ATTACHED, ENGRAVED PLATE SHOWING S.E.S. BUSSING TO INCLUDE ALL TORQUE VALUES FOR PREVENTATIVE MAINTENANCE PURPOSES.

8.9. ALL SERVICES SHALL BE LISTED FOR FRONT ACCESSIBILITY ONLY, WHERE LOCATED ON WALLS, ALL OTHERS SHALL BE FRONT.

8.10. ALL SERVICE DOORS SHALL BE HINGED AND LOCKABLE.

8.11. NEW SERVICE INSTALLATIONS FOR MULTI TENANT FACILITIES WITH MULTIMETER SERVICES, SHALL HAVE ALL UNDERGROUND CONDUITS INSTALLED IN THE APPROPRIATE SERVICE SECTION. DO NOT INSTALL CONDUITS WHERE THERE EXISTS A POSSIBILITY OF IMPROPER CABLE ROUTING TO OTHER SECTIONS.

9. DISTRIBUTION

9.1. PANELBOARDS (EXISTING): ADD CIRCUIT BREAKERS AS REQUIRED FOR CIRCUITING. MATCH PRECISELY BRAND AND A.I.C. RATING. TANDEM AND PIGGY-BACK BREAKERS ARE NOT PERMITTED. ALL LUGS OR CONNECTORS TO BE 90 DEGREE C RATED.

9.2. PANELBOARDS (NEW): TO BE RATED AS SHOWN ON DRAWINGS. PROVIDE NEMA ENCLOSURES AS REQUIRED BY CODE. CUTOUT BOXES TO BE ENLARGED FOR DOUBLE NEUTRALS AND LUGS AND SHALL BE SIZED TO ACCOMMODATE ISOLATED GROUND BUSS AND NORMAL GROUND BUSS. ALL TERMINATIONS OR CONNECTORS TO BE RATED 75 DEGREE CENTIGRADE MINIMUM.

9.3. CIRCUIT BREAKERS WILL BE SWITCH RATED AND AMBIENT COMPENSATED FOR ALL CIRCUITS. PROVIDE SWITCHED NEUTRALS ON ALL CIRCUIT BREAKERS FEEDING CLASS 1 AND CLASS 2 AREAS WITH NEUTRALS. GFCI ON CIRCUITS WITH NEUTRALS TO DEVICES ABOVE CLASSIFIED AREAS. ALL LIGHTING PANELS/CIRCUIT BREAKERS SHALL BE RATED FOR CONTINUOUS DUTY.

9.4. ALL EQUIPMENT (PANELS, DISCONNECT SWITCHES, STARTERS, ETC.) WILL BE MARKED WITH BLACK ENGRAVERS STOCK TAGS EMBOSSED WITH 1/4" HIGH LETTERS DESCRIBING EACH ITEM. CONDUCTORS WILL BE MARKED AT ALL TERMINATION AND JUNCTION POINTS (PANELS, JUNCTION BOXES, SPLICES, ETC.) WITH LABELS BEARING THE PANEL AND CIRCUIT NUMBER WHICH FEEDS EACH CONDUCTOR (PER NEC 210.4, 300.3).

9.5. ALL PANELBOARDS WILL HAVE TYPED DIRECTORY CARDS IDENTIFYING ALL CIRCUITS AND SPACES REVISED, IF NECESSARY, FOR THIS WORK. EXISTING PANEL/PANELBOARDS SHALL HAVE EACH EXISTING CIRCUIT TRACED AND VERIFIED. UPDATE PANEL DIRECTORY AS NEEDED.

9.6. TRANSFORMERS 15 KVA AND ABOVE SHALL BE 150 DEGREE CENTIGRADE TEMPERATURE RISE ABOVE 40 DEGREE CENTIGRADE AMBIENT. ALL INSULATING MATERIALS TO BE IN ACCORDANCE WITH NEMA ST20-1972 STANDARDS FOR A 220 DEGREE C. UL COMPONENT RECOGNIZED INSULATION SYSTEM. SINGLE PHASE TRANSFORMERS 15 KVA THROUGH 167 KVA, AND THREE PHASE TRANSFORMERS THROUGH 112.5 KVA SHALL BE DESIGNED SO THEY CAN BE EITHER FLOOR OR WALL MOUNTED. THE TRANSFORMER SHALL BE LISTED BY UNDERWRITERS LABORATORY FOR THE SPECIFIED TEMPERATURE RISE.

9.7. LABEL ALL PANELS/TRANSFORMERS/DISCONNECTS WITH "WARNING" - ELECTRICAL EQUIPMENT - DANGER - QUALIFIED PERSONNEL ONLY TO OPERATE AND OPEN EQUIPMENT.

9.8. ALL ELECTRICAL EQUIPMENT INCLUDING SWITCHBOARDS, PANELBOARDS, INDUSTRIAL CONTROL PANELS AND MOTOR CONTROL CENTERS SHALL BE MARKED IN ACCORDANCE WITH NEC ARTICLE #110.16 FOR FLASH HAZARD. (REFERENCE NFPA #70E-2000 AND ANSI #Z535.4-1998).

9.9. DISCONNECT SWITCHES SHALL BE HEAVY-DUTY, QUICK-MAKE, QUICK-BREAK, HORSEPOWER RATED, NEMA 1 INDOOR, NEMA 3R GASKETED, (4X) NEMA 12, OR NEMA 7 AS APPLICABLE WITH CLASS RK-1 BUSSMAN FUSES AND REJECTION CLIPS, SIZED OR AS SHOWN ON DRAWINGS. PROPER DISCONNECTS PER N.E.C. WILL BE PROVIDED FOR EACH PIECE OF ELECTRICAL EQUIPMENT.

9.10. MANUAL MOTOR STARTERS WITH THERMAL OVERLOADS WILL BE PROVIDED FOR MOTORS 1/2 HP TO 1 HP. SQUARE 'D' CLASS 2510, 2511, 2512 OR EQUAL, AMBIENT COMPENSATED AS REQUIRED.

9.11. MAGNETIC MOTOR STARTERS WITH THERMAL OVERLOADS, (2) AUXILIARY CONTACT SWITCHES, INTERNAL LINE VOLTAGE TO 24 VOLT TRANSFORMER (250VA. MIN) WITH PROPER PRIMARY/SECONDARY PROTECTION, AMBIENT COMPENSATED, GREEN RUNNING LIGHT, HAND-OFF-AUTO, ACROSS THE LINE STARTERS TO 25HP. WILL BE PROVIDED WITH EACH MOTOR AS SHOWN ON THE DRAWING (ONE HORSEPOWER TO 25 H.P.).

9.12. ALL PANELBOARDS SHALL HAVE HINGED, LOCKABLE COVERS. ALSO SEE SECTION 7.4.

10. LUMINAIRES

10.1. FURNISH AND INSTALL ALL LUMINAIRES COMPLETE WITH LAMPS, WHIPS AND ACCESSORIES. ALL RECESSED LUMINAIRES WILL BE RATED FOR USE IN ANY CEILING APPLICATIONS AND BE THERMALLY PROTECTED.

10.2. MOUNTING TYPE AND VOLTAGE OF LUMINAIRES IS THE RESPONSIBILITY OF THE CONTRACTOR. (4) EARTHQUAKE CLIPS WILL BE INSTALLED ON EACH FIXTURE MOUNTED IN GRID OR FLANGE TYPE CEILINGS. FLUORESCENT FIXTURE LENSES WILL BE 100% ACRYLIC, .125" THICK MINIMUM.

10.3. ALL LUMINAIRES TO BE INSTALLED IN SYMMETRICAL MANNER FREE FROM LIGHT LEAKS AND DIRTY LENSES OR REFLECTORS.

10.4. ALL LAY-IN LUMINAIRES IN ACOUSTICAL CEILING SYSTEMS WILL BE INSTALLED PER ASTM STANDARDS C635, C635M, C636, C636M, AND UBC STANDARD 25-2 VERIFY WITH LOCAL BUILDING AUTHORITY.

10.5. SUPPORT LUMINAIRES PER UBC-1507 WITH TWO LOOSE SIZE 9 WIRES TO STRUCTURES ON OPPOSITE CORNERS AND 2 TAUGHT SIZE 9 WIRE TO STRUCTURES AT CORNERS OR TO GRID WITHIN 3" OF FIXTURE. ALL H.I.D. OR FLUORESCENT LUMINAIRES WILL HAVE GREATER THAN .9 POWER FACTOR BALLASTS.

11. TELEPHONE SYSTEM

11.1. PROVIDE AND INSTALL A COMPLETE SYSTEM OF EMPTY RACEWAYS (WITH PULL STRING). PROVIDE REQUIRED/REQUESTED INFORMATION TO TELEPHONE COMPANY PRIOR TO INSTALLATION.

12. DATA/INFORMATION SYSTEMS

12.1. PROVIDE AND INSTALL A COMPLETE SYSTEM OF RACEWAYS (CABLE TRAYS, J-HOOKS, CONDUIT SLEEVES) OF PREFERABLY OPEN CONSTRUCTION WITH PULL LINE. RACEWAYS TO BE CONTINUOUS.

13. FIRE ALARM SYSTEM

13.1. PROVIDE AND INSTALL A COMPLETE AND WORKING FIRE ALARM SYSTEM, POWER LIMITED BY NEC DEFINITION. ALL WIRING TO BE CLASS "A" OR "B" WITH DEVICES AND CONDUCTORS TO BE U.L., F.M., OR C.S.A. LISTED AND APPROVED (LABELS ON EQUIPMENT).

13.2. ALL WIRING TO BE #14 A.W.G. CU., STRANDED, 105 DEGREE INSULATED, PLENUM RATED. INSTALLED IN CONDUIT OR RACEWAY WITH SIX (6) FEET SPACING BETWEEN OUTPUT/INPUT PER N.F.P.A.

13.3. SYSTEM INSTALLATION AND DEVICES WILL BE IN ACCORDANCE WITH ALL PERTINENT AND THE MOST STRINGENT REQUIREMENTS (ONLY POWER LIMITED SYSTEMS WILL BE ACCEPTED) OF:

13.3.1. NATIONAL FIRE PROTECTION AGENCY (NFPA) NFPA 70 - NATIONAL ELECTRICAL CODE
13.3.2. NFPA 72
13.3.3. NFPA 71 - CENTRAL STATION SIGNALING
13.3.4. ARS TITLE 26, CHAPTERS 2-3 (ARIZONA STATE FIRE CODE)
13.3.5. ADA AND ARIZONA HANDICAPPED REGULATIONS
13.3.6. INTERNATIONAL CONSTRUCTION BUILDING AND FIRE CODES
13.3.7. WORK SHALL BE INSTALLED BY UL CERTIFIED INSTALLERS

13.4. DO NOT POSITION SMOKE DETECTORS WITHIN 36" OF ANY AIR HANDLING GRILLES (SUPPLY OR RETURN) OR WITHIN 12" OF FACILITY LIGHTING FIXTURES.

13.5. ALL DEVICE BACK BOXES TO BE MOUNTED FLUSH, PERPENDICULAR TO FINISH WALLS AND CEILING SURFACES USING STANDARD "TRADE" MOUNTING HARDWARE.

13.6. CONTRACTOR WILL COMPLY WITH PROJECT SPECIFICATIONS, AND SUPPLY SHOP DRAWINGS, CUTS, SAMPLES, ETC. TO THE ENGINEER WITHIN 5 DAYS OF CONTRACT AS REQUIRED.

13.7. SYSTEM MONITORED AT ACM, U.L. APPROVED MONITORING STATION LOCATED IN CITY OF PROJECT.

13.8. EXTEND EXISTING SYSTEM TO NEW DEVICES. LOADS ON EACH ZONE, OR RUN TO BE CALCULATED (RESULTS TO ENGINEER) PRIOR TO INSTALLATION. ADDITIONAL RUNS, ZONES, CONTROL CARDS, ETC., REQUIRED FOR FACP/FAANN TO BE INCLUDED IN BID.

13.9. GAMEWELL IS AN ACCEPTABLE MANUFACTURER.

13.10. ALL SPRINKLER SYSTEMS WITH GREATER THAN 100 HEADS SHALL HAVE MINIMUM 4 ZONE CLASS B FIRE ALARM CONTROL PANEL WITH AUTO DIALER. (UNLESS COMPLETE CLASS A FIRE ALARM SYSTEM IS INDICATED ON PLANS). SPRINKLER SYSTEMS WITH LESS THAN 100 HEADS REQUIRE ONLY CONNECTION TO WATER FLOW AND TAMPER SWITCH. (UNLESS OTHERWISE NOTED OR INDICATED)

14. ELEVATORS

14.1. ALL INSTALLATIONS AND EQUIPMENT SHALL COMPLY WITH N.E.C. ARTICLE 620 AND ASME/ANSI STANDARDS A17.1.

14.2. SPECIFIC REQUIREMENTS INCLUDE BUT ARE NOT LIMITED TO:

14.2.1. A SEPARATE BRANCH CIRCUIT WITH DISCONNECT (CAPABLE OF BEING LOCKED IN THE OPEN POSITION, LOCATED IN THE MACHINE ROOM)(BRADY NO. 2AF98 OR EQUAL.) PROVIDED FOR EACH ELEVATOR CAR FOR LIGHTS, FANS AND/OR ACCESSORIES.

14.2.2. HVAC SYSTEMS SHALL BE PROVIDED WITH SEPARATE BRANCH CIRCUIT. (CAPABLE OF BEING LOCKED IN THE OPEN POSITION LOCATED IN THE MACHINE ROOM) (BRADY NO. 2AF98 OR EQUAL.) HVAC TAPS WITH OTHER UNITS).

14.2.3. A SEPARATE BRANCH CIRCUIT FOR EQUIPMENT ROOM LIGHTING AND GFCI PROTECTED OUTLET (REQUIRED).

14.2.4. DEDICATED BRANCH CIRCUITS FOR HOIST WAY PIT LIGHTING AND GFCI OUTLET (REQUIRED). MINIMUM LIGHTING SHALL BE 4'-0" FLUORESCENT STRIP, (2) LAMPS AND WIRE GUARD.

14.2.5. NO CONDUITS, PIPES, DUCTS OR OTHER RACEWAY SYSTEMS SHALL PASS INTO OR THROUGH THE ELEVATOR EQUIPMENT ROOM OR HOIST WAY WHICH IS NOT DIRECTLY RELATED TO ELEVATOR OPERATION. (THIS DOES NOT INCLUDE REQUIRED SPRINKLER PIPING).

14.2.6. IF SPRINKLERS ARE PRESENT, IN EITHER OR BOTH ELEVATOR EQUIPMENT ROOM AND ELEVATOR HOIST WAY, THE CONTRACTOR SHALL PROVIDE A SHUNT TRIP MECHANISM AS A MEANS OF DISCONNECTING POWER TO THE AFFECTED ELEVATOR AND CONTROLLER PRIOR TO THE APPLICATION OF WATER. (SPRINKLER ACTIVATION OUTSIDE OF ELEVATOR EQUIPMENT ROOM OR HOIST WAY SHALL NOT DISCONNECT POWER).

14.2.7. INSTALL 165° RATE OF RISE HEAT DETECTORS IN THE ELEVATOR EQUIPMENT ROOM, TOP OF HOIST WAY AND BOTTOM OF HOIST WAY - ALL WITH AUX. CONTACTS FOR CONNECTION TO BOTH FIRE ALARM CONTROL PANEL AND SHUNT TRIP MECHANISM IN EQUIPMENT ROOM. ANY DETECTOR ACTIVATION WILL SHUNT TRIP THE EQUIPMENT.

14.2.8. INSTALL SMOKE DETECTORS IN ELEVATOR EQUIPMENT ROOM, TOP OF HOIST WAY AND BOTTOM OF HOIST WAY AND CONNECT TO FIRE ALARM CONTROL PANEL AS A MEANS OF PRELIMINARY SHUT DOWN WARNING, AND TO ELEVATOR CONTROLLER FOR RECALL FUNCTION.

14.2.9. PROVIDE SMOKE DETECTORS IN ALL ELEVATOR LOBBIES. PROVIDE AUXILIARY CONTACTS AT EACH SMOKE DETECTOR FOR CONNECTION TO ELEVATOR CONTROLLER FOR ALTERNATE FLOOR RECALL MODE DURING A FIRE.

FIRST SUBMITTAL 08.21.19

GKA ARCHITECTS

BUILDING ALTERATIONS

THOUSAND OAKS COMMUNITY CENTER
CHILDREN'S RESTROOM
2525 MOORPARK RD.,
THOUSAND OAKS, CA 91362

CLIENT: CONEJO RECREATION
& PARK DISTRICT

Architect
G. Korn, AIA
GKA Architects
1301 N La Brea Ave
Inglewood, CA 90302
gkorn@gka-arc.com

A & N DESIGN GROUP
MECHANICAL· PLUMBING· ELECTRICAL
21550 OXNARD STREET #300
WOODLAND HILLS, CA 91367
TEL: (818)-288-4361
FAX: (818)-758-0087

REGISTERED PROFESSIONAL ENGINEER
AMIR AMIRI RAZAVIAN
No. E20918
Exp. 09/30/20
ELECTRICAL
STATE OF CALIFORNIA

No.	Description	Date

Project number
Date 08.21.19
Drawn by AN
Checked by AN
Drawing Name SPECIFICATIONS
Drawing No. E0.02
NOTE: DO NOT SCALE DRAWINGS
Scale -

LUMINAIRE SCHEDULE

CALLOUT	SYMBOL	LAMP	DESCRIPTION	BALLAST	MOUNTING	MODEL	INPUT WATTS	VOLTS	NOTE 1
A	○	(1) LED	6" DIA RECESSED LED LIGHT FIXTURE	DIMMING	RECESSED	1000 LUMEN 6" DOWNLIGHT. LITHONIA OR EQUAL	12.8	120V 1P 2W	VERIFY WITH ARCHITECT

LIGHTING FIXTURES GENERAL NOTES

1. FIXTURES SHALL HAVE APPROPRIATE UL LABEL, DAMP, OR WET AS REQUIRED BY CODES AND ORDINANCES.
2. LIGHTING FIXTURE CATALOG NUMBERS ARE SERIES TYPE ONLY. PROVIDE ALL NECESSARY HARDWARE AS REQUIRED BY THE SPECIF CATIONS, DRAWINGS, AND PROJECT CONDITIONS FOR A COMPLETE AND OPERABLE INSTALLATION.
3. PRIOR TO ORDERING ANY LIGHTING EQUIPMENT, CONTRACTOR SHALL COORDINATE ALL FIXTURE LOCATIONS WITH ARCHITECTURAL REFLECTED CEILING PLANS AND PRIOR TO ORDERING ANY LIGHTING EQUIPMENT, THE CEILING CAVITY DEPTHS.
4. CONTRACTOR SHALL VERIFY FIXTURE VOLTAGES AND CEILING TRIM COMPATIBILITY PRIOR TO ORDERING FIXTURE.
5. PROVIDE APPROVED FIRE-RATED ENCLOSURES FOR ALL LIGHTING FIXTURES LOCATED IN FIRE-RATED CEILINGS AND/OR WALLS.
6. UPON INITIAL ENERGIZING OF ALL NEW FLUORESCENT LAMPS, A CONTINUOUS PERIOD OF 30 HOURS SHALL OCCUR PRIOR TO DE-ENERGIZING OF LAMPS, FOR MANUFACTURER REQUIRED LAMP BURN-IN AND MAXIMUM LAMP LIFE.
7. ENSURE COMPATIBILITY OF ALL LIGHTING SYSTEM COMPONENTS SUCH AS DIMMING SYSTEMS. FIXTURES. LAMPS, BALLAST(S), AND DIMMING SYSTEMS/INDIVIDUAL CONTROLS MUST BE FACTORY CERTIFIED COMPATIBLE FOR FULL RANGE OF DIMMING COMPATIBILITY.
8. PROVIDE CLEARANCES FROM COMBUSTIBLES A MINIMUM OF 1/2" (OTHER THAN AT POINTS OF SUPPORT) AND 3" FROM INSULATION FOR RECESSED LIGHTING FIXTURES WHICH ARE NON-IC RATED.
9. PROVIDE A MINIMUM OF TWO (2) #12 SUPPORT WIRES ATTACHED TO BUILDING FRAME IN ADDITION TO T-BAR CLIPS FOR FLUORESCENT FIXTURES RECESSED IN SUSPENDED T-BAR CEILING.
10. PROVIDE (4) SHEET METAL SCREWS, ONE INSTALLED IN EACH CORNER OF THE FIXTURE ATTACHING THE FIXTURE TO THE GRID. SCREWS SHALL NOT BE VISIBLE NOR IMPEDE INSTALLATION OF GRID PANELS.
11. PROVIDE DOOR-TO-FRAME AND LENS-TO-DOOR GASKETING, INVERTED LENS, AND FOOD SERVICE RATING FOR ALL FIXTURES LOCATED IN FOOD SERVICE AREAS.
12. LAMPS SHALL BE PROVIDED AND INSTALLED ACCORDING TO THIS FIXTURE SCHEDULE AND PROJECT SPECIFICATIONS. ENSURE COMPATIBILITY BETWEEN FIXTURE, LAMP AND BALLAST(S).
13. APPROVED LAMP MANUFACTURERS ARE OSRAM, SYLVANIA, GE, VENTURE (METAL HALIDE ONLY), AND PHILLIPS - NO EXCEPTIONS.
14. FIXTURES SHALL BE ORDERED WITH APPROPRIATE BALLAST(S) THAT HAVE UL AND CBM LABELS. ALL BALLASTS MUST CONFORM TO TITLE 24 REQUIREMENTS FOR PERFORMANCE AND EFFICIENCY.
15. FLUORESCENT FIXTURES TO BE SUPPLIED WITH 'QUICK DISCONNECT" SAFETY BALLAST HARDWARE WHICH ARE UL AND CSA CERTIFIED IN ACCORDANCE WITH NEC 410.73(G) AND CEC 30-308(4).
16. FLUORESCENT AND HIGH INTENSITY DISCHARGE BALLASTS SHALL BE ELECTRONIC TYPE. PROVIDE END OF LIFE (EOL) SHUT-DOWN PROTECTION FOR COMPACT FLUORESCENT LAMPS.
17. FIXTURES, TRIMS, REFLECTORS. AND LAMPS SHALL BE CLEANED AND FREE FROM DIRT, DUST, LABEL ADHESIVE, AND FINGER PRINTS.
18. ALL LIGHT FIXTURES SHALL BE MOUNTED AND SUPPORTED IN ACCORDANCE WITH OSHA STANDARDS AND ALL LOCAL, STATE, AND NATIONAL ELECTRICAL CODES. PROVIDE ALL REQUIRED SEISMIC BRACING FOR SUSPENDED LIGHT FIXTURES.
19. PROVIDE LIGHT FIXTURE MOUNTING KITS AS REQUIRED TO SUIT THE EXACT TYPE OF CEILING TO WHICH THEY ARE MOUNTED.
20. COORDINATE FIXTURE AND TRIM FINISHES WITH ARCHITECT PRIOR TO ORDERING.
21. EACH DIMMED CIRCUIT SHALL CARRY A SEPARATE NEUTRAL CONDUCTOR WITH TRACER COLOR TO MATCH PHASE CONDUCTOR.

TANDEM WIRING NOTES:

22. PROVIDE MULTIPLE BALLASTS FOR DUAL-LEVEL SWITCHING AND WIRING (i.e. TANDEM) AS INDICATE ON THE PLANS.
23. LAMP FIXTURES TO BE TANDEM WIRED W/ ELECTRONIC BALLAST CONFIGURATION AS FOLLOWS:
    - 23.1. "M" DENOTES MASTER FIXTURE W/ 1-4 LAMP ELECTRONIC BALLAST TO SUPPLY 2-OUTSIDE LAMPS IN EACH THE "M" & "S" FIXTURE.
    - 23.2. "S" DENOTES SLAVE FIXTURE W/ 1-2 LAMP ELECTRONIC BALLAST TO SUPPLY 1-INSIDE LAMP IN EACH THE "M" & "S" FIXTURE.
    - 23.3. "O' DENOTES ODD FIXTURE (NO PAIR) W/ 1-2 LAMP &1-LAMP ELECTRONIC BALLAST.

SUBSTITUTION NOTES

1. ALL SUBSTITUTIONS MUST BE APPROVED BY THE OWNER, ARCHITECT AND THE ELECTRICAL ENGINEER. PRIOR TO CONSIDERING ANY SUBSTITIONS, THE FOLLOWING MUST BE PROVIDED (15) DAYS PRIOR TO BID TIME:
    - 1.1. COMPLETE AND OPERABLE SAMPLES OF SUBSTITUTIONS CONTAINING 120V CORD AND PLUG CONNECTIONS ALONG WITH CURRENT MANUFACTURER'S DATA SHEETS.
    - 1.2. PHOTOMETRIC STUDIES UTILIZING IES STANDARD PHOTOMETRIC DATA AND SOFTWARE FOR THIS PROJECT USING PROPOSED SUBSTITUTION FIXTURES TO ENSURE DESIGN INTENT IS MET. LUMEN OUTPUT AND LIGHT LOSS FACTOR VALUES TO BE DICTATED BY THE ELECTRICAL ENGINEER FOR THIS STUDY.
    - 1.3. WHEN APPLICABLE, PHOTOMETRIC STUDIES OF EMERGENCY LIGHTING APPLICATIONS ARE REQUIRED FOR AREAS IN THIS PROJECT UTILIZING PROPOSED SUBSTITUTIONS. BATTERY PACK LUMEN OUTPUT VALUES TO BE BASED ON EMERGENCY LIGHTING NOTES CONTAINED HEREWITH.

LIGHTING LOCATION

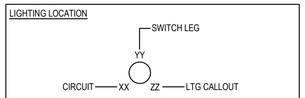

LIGHTING NAMING CONVENTION

"U.O.N BY ARCHITECT"

INTERIOR
LZZ
└─NUMBER SEQUENTIALLY
└─DENOTES INTERIOR

EXTERIOR
LxZZ
└─NUMBER SEQUENTIALLY
└─DENOTES EXTERIOR

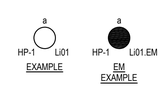

GENERAL LIGHTING NOTES

1. DURING EMERGENCY CONDITIONS EMERGENCY LIGHTING CIRCUITS SHALL BYPASS ALL LIGHTING CONTROLS IN ORDER TO ENERGIZE ALL CONNECTED LUMINAIRIES AT FULL CAPACITY. PROVIDE UL924 RELAYS AS REQUIRED TO BYPASS ROOM CONTROLS.
2. ASSURE COMPATIBILITY OF DIMMERS WITH CONTROLLED LUMINAIRIES PRIOR TO PURCHASING.
3. LIGHTING CONTROLS SHALL BE INSTALLED WHICH MEET ALL REQUIREMENTS OF THE 2016 CA ENERGY CODE.
4. AUTOMATIC LIGHTING SHUT-OFF CONTROLS TO BE PROVIDED BY LOCAL OCCUPANCY SENSORS UNLESS OTHERWISE NOTED. APARTMENT PUBLIC SPACES ARE ACTIVE 24/7 AND THEREFORE EXEMPT FROM AUTOMATIC LIGHTING SHUT-OFF REQUIREMENTS.
5. DAYLIGHT ZONES ARE REFERRED TO AS 'PRIMARY' AND 'SECONDARY' ON PLANS AND DENOTED BY DASHED LINES.
6. LOCATIONS OF OCCUPANCY SENSORS, PHOTO SENSORS, SWITCHES, AND DIMMERS ARE DIAGRAMMATIC. CONTRACTOR TO FIELD-IDENTIFY OPTIMAL LOCATIONS AND QUANTITIES.
7. FOR CUSTOM FF&E FIXTURES, IT IS THE MANUFACTURER'S RESPONSIBILITY TO FURNISH PRODUCTS WHICH ARE COMPLIANT WITH ALL 2016 CALIFORNIA TITLE 24 REQUIREMENTS, AS WELL AS MATCH THE ELECTRICAL SPECIFICATIONS PROVIDED IN THE LUMINAIRIES SCHEDULES. PROVIDE SUBMITTAL SHOP DRAWINGS WITHIN 30 DAYS OF RECEIVING FIXTURE ORDER. SUBMITTALS SHALL CLEARLY INDICATE LAMPING AND MAXIMUM WATTAGE RATING OF LAMP SOCKETS. NON-COMPLIANT FIXTURES REJECTED BY ELECTRICAL INSPECTOR SHALL BE RETURNED TO THE MANUFACTURER FOR REWORKING AND/OR RE-LABELING.

SWITCH SCHEDULE

CALLOUT	SYMBOL	DESCRIPTION
0-2 HOUR TIMER	$T	0-2 HOUR DIGITAL TIMER SWITCH, SENSOR SWITCH PTS 60/710, OR EQUAL, FOR CLOSET 70 SQFT OR LESS
PHOTOCELL SENSOR	PC	CEILING MOUNTED CLOSED LOOP DAYLIGHT SENSOR PHOTOSENSOR FOR DAYLIGHT ZONE CONTROL SHALL AUTOMATICALLY ADJUST THE LIGHT OUTPUT OF ALL CONNECTED LUMINAIRIES BASED ON THE DAYLIGHT LEVEL IN THE SPACE
GENERIC SWITCH	$	TOGGLE SWITCH FOR MANUAL ON/OFF LIGHTING CONTROL. SUBSCRIPT INDICATE SWITCH FIXTURES ARE TO BE CONTROLLED BY WHICH SWITCH
LOW VOLTAGE KEYPAD	$KP	LOW VOLTAGE KEYPAD CONNECTED TO LIGHTING CONTROL SYSTEM. NUMBER OF PUSH BUTTONS AS REQUIRED - REFER TO A/V SCHEDULES
OCC SENSOR (LOW VOLTAGE)	OS / OS	OCCUPANCY SENSOR SHALL TURN OFF ALL CONNECTED LUMINAIRIES WITHIN 30 MINUTES OF SPACE BEING VACANT. (CEILING MOUNTED AND WALL MOUNTED)
THREEWAY SWITCH	$3	3 WAY LINE VOLTAGE SWITCH
DIMMER SWITCH	$D	DIMMER SWITCH FOR MANUAL MULTI-LEVEL LIGHTING CONTROL. SWITCH SHALL ALSO HAVE MANUAL ON/OFF FUNCTIONALITY. SUBSCRIPT INDICATES WHICH FIXTURES ARE TO BE CONTROLLED BY WHICH DIMMER
VACANCY SWITCH	$VS	VACANCY SWITCH SHALL TURN OFF ALL CONNECTED LUMINAIRIES WITHIN 30 MINUTES OF SPACE BEING VACANT. (WALL MOUNTED)

LIGHTING CONTROL SYSTEM REQUIREMENTS

1. CONTRACTOR TO PROVIDE A FULLY OPERATIONAL LIGHTING CONTROL SYSTEM.
2. ELECTRICAL CONTRACTOR SHALL COORDINATE WITH A LIGHTING CONTROLS VENDOR TO OBTAIN LIGHTING CONTROL SYSTEM PACKAGE COMPLETE WITH DEVICES, WIRING DIAGRAMS, ANNOTATED PLANS INDICATING WHICH DEVICE TO BE USED IN EACH LOCATION, CONNECTION REQUIREMENTS, SET UP INSTRUCTIONS, COMMISSIONING AND CHECK-OUT FOLLOWING COMPLETION. PROVIDE ALL LOW VOLTAGE WIRING AS REQUIRED FOR CONTROL DEVICE INTERCONNECTIONS.
3. CONTRACTOR TO PROVIDE DIMMING AND SWITCHING SYSTEM. ACCEPTABLE MANUFACTURERS INCLUDE N-LIGHT, LUTRON, CRESTRON, LEVITON, PHILIPS, AND WATTSTOPPER.
4. PROVIDE LIGHTING CONTROL PANEL (LCP) TO PERFORM THE FUNCTIONS DESCRIBED BELOW.
5. CONTROL EXTERIOR LIGHTING BASED ON ASTRONOMIC TIMECLOCK SCHEDULING. WHERE REQUIRED, OUTDOOR LIGHTING WILL INCORPORATE LOCAL MOTION DETECTOR/DIMMING CONTROLS.
6. INTERIOR PRIMARY AND SECONDARY DAYLIGHT HARVESTING CONTROL PER ENERGY CODE.
7. PROVIDE MULTI-SCENE DIMMING FOR MORNING, DAY AND NIGHT MODES. INSTALLER TO COORDINATE SCENE CONFIGURATIONS WITH HOTEL MANAGER.
8. PROVIDE PUSHBUTTON CONTROL STATIONS FOR SELECTING LIGHTING SCENES. REFER TO LOCATIONS AND QUANTITY ON PLANS.
9. DEMAND RESPONSIVE CONTROL: LCP SHALL BE CAPABLE OF RECEIVING AND RESPONDING TO AT LEAST ONE STANDARDS BASED MESSAGING PROTOCOL WHICH ENABLES DEMAND RESPONSE AFTER RECEIVING A DEMAND RESPONSE SIGNAL. LCP SHALL BE CAPABLE OF LOWERING THE BUILDING'S TOTAL LIGHTING POWER BY A MINIMUM OF 15% BELOW THE TOTAL INSTALLED LIGHTING POWER. LIGHTING SHALL BE REDUCED IN A MANNER CONSISTENT WITH UNIFORM LEVEL OF ILLUMINATION REQUIREMENTS IN TABLE 130.1-A.
10. PROVIDE DIMMING AND SWITCHING CHANNELS AS INDICATED IN LIGHTING CONTROL SCHEDULE.
11. CONTRACTOR TO PROVIDE WIRING FROM BRANCH PANEL CIRCUIT BREAKER TO TERMINALS ON LCP AND THEN TO LOADS THROUGHOUT FACILITY.
12. CONTRACTOR TO PROVIDE ALL LIGHTING CONTROL SENSORS AND ASSOCIATED LINE-VOLTAGE AND LOW-VOLTAGE WIRING ASSOCIATED WITH LIGHTING CONTROLS.
13. LIGHTING CONTROLS VENDOR TO PROVIDE SHOP DRAWINGS INCLUDING FLOOR PLANS AND WIRING DIAGRAMS FOR USE BY INSTALLING ELECTRICIAN.
14. LIGHTING CONTROLS VENDOR TO PROVIDE ON-SITE PRE-WIRE VISIT AND INSTRUCT THE CONTRACTOR HOW TO INSTALL THE PANEL, CONTROLS AND WIRING.
15. CONTRACTOR TO PROVIDE LOW-VOLTAGE CABLES AS DIRECTED AND APPROVED BY LIGHTING CONTROLS MANUFACTURER.

FIRST SUBMITTAL 08.21.19

G K A ARCHITECTS

BUILDING ALTERATIONS

THOUSAND OAKS COMMUNITY CENTER
CHILDREN'S RESTROOM
2525 MOORPARK RD.,
THOUSAND OAKS, CA 91362

CLIENT: CONEJO RECREATION & PARK DISTRICT

Architect
G. Korn, AIA
GKA Architects
1301 N La Brea Ave
Inglewood, CA 90302
gkorn@gka-arc.com

A & N DESIGN GROUP
MECHANICAL· PLUMBING· ELECTRICAL
21550 OXNARD STREET #300
WOODLAND HILLS, CA 91367
TEL: (818)-288-4361
FAX: (818)-758-0087

REGISTERED PROFESSIONAL ENGINEER
AMIR AMIRIRAZAVIAN
No. E20918
Exp. 09/30/20
ELECTRICAL
STATE OF CALIFORNIA

No.	Description	Date

Project number	
Date	08.21.19
Drawn by	AN
Checked by	AN

Drawing Name
LIGHTING SCHEDULE

Drawing No.
E0.03

NOTE: DO NOT SCALE DRAWINGS
Scale -

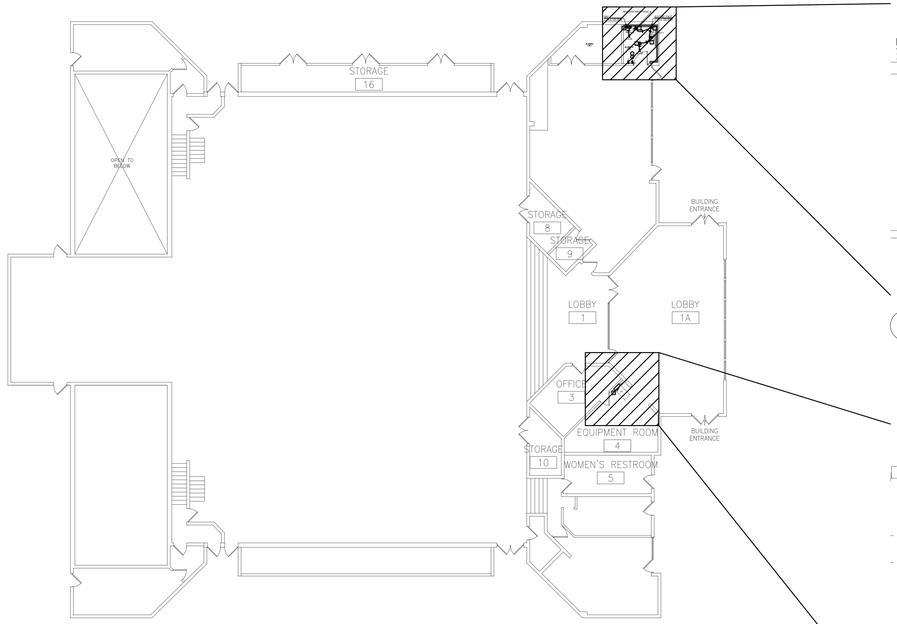

1 KEY PLAN

SCALE: 1/16" = 1'-0"

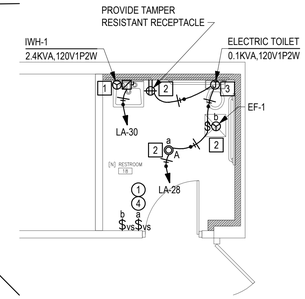

2 LIGHTING AND POWER

SCALE: 1/4" = 1'-0"

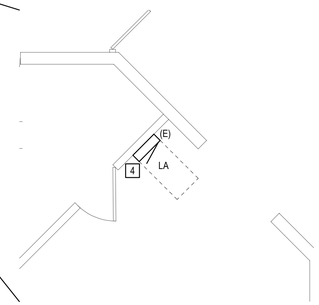

3 EXISTING PANEL "LA"

SCALE: 1/4" = 1'-0"

KEYNOTES

1. PROVIDE POWER FOR NEW WATER HEATER. CONNECT CIRCUIT TO EXISTING PANEL. VERIFY LOAD, SIZE, RATING AND CONDITION OF EXISTING PANEL PRIOR TO USE, TO ENSURE THAT THEY MEET REQUIRED SIZE, AND ALL U.L. RATINGS AND REPLACE AS REQUIRE. PROVIDE NEW BRANCH CIRCUITRY. COORDINATE INSTALLATION WITH MECHANICAL CONTRACTOR PRIOR INSTALLATION AND INSTALL EQUIPMENT AS PER MANUFACTURER'S SPECIFICATIONS.
2. PROVIDE POWER FOR NEW LIGHT, EXHAUST FAN AND RECEPTACLE. CONNECT CIRCUIT TO EXISTING PANEL. VERIFY LOAD, SIZE, RATING AND CONDITION OF EXISTING PANEL PRIOR TO USE, TO ENSURE THAT THEY MEET REQUIRED SIZE, AND ALL U.L. RATINGS AND REPLACE AS REQUIRE. PROVIDE NEW BRANCH CIRCUITRY.
3. PROVIDE POWER FOR NEW ELECTRIC TOILET. CONNECT CIRCUIT TO EXISTING PANEL. VERIFY LOAD, SIZE, RATING AND CONDITION OF EXISTING PANEL PRIOR TO USE, TO ENSURE THAT THEY MEET REQUIRED SIZE, AND ALL U.L. RATINGS AND REPLACE AS REQUIRE. PROVIDE NEW BRANCH CIRCUITRY. COORDINATE INSTALLATION WITH MECHANICAL CONTRACTOR PRIOR INSTALLATION AND INSTALL EQUIPMENT AS PER MANUFACTURER'S SPECIFICATIONS.
4. EXISTING PANEL TO REMAIN: USE EXISTING CIRCUIT BREAKERS WHERE AVAILABLE. ADD OR REARRANGE CIRCUIT BREAKERS WITHIN PANEL AS REQUIRED TO MATCH NEW CIRCUIT DESIGNATIONS SHOWN ON DRAWINGS. OVERCURRENT PROTECTION MUST COMPLY WITH NEC 210.20. REPLACE DAMAGED OR BROKEN CIRCUIT BREAKERS. NEW CIRCUIT BREAKERS SHALL BE THERMAL MAGNETIC TYPE. FAULT CURRENT AND SERIES RATING MUST BE MAINTAINED WITH MODIFICATIONS. PLUG UNUSED OPENINGS WITH BLANK FILLERS. REPAIR OR REPLACE BROKEN HINGES AND DOOR LATCHES. REMOVE TAPE, ETC., AND TOUCH UP MARKS-A-LOT TYPE MARKINGS ON PANELS WITH PAINT THAT MATCHES EXISTING COLOR. REMOVE ALL BRANCH WIRING FROM PANEL FOR EXISTING CIRCUITS THAT ARE BEING DELETED BECAUSE OF DEMOLITION, LEAVING ONLY THOSE EXISTING CIRCUITS THAT ARE TO REMAIN. VERIFY FINAL USE OF EACH CIRCUIT AND INSTALL A NEW TYPED DIRECTORY.

LIGHTING CONTROL KEYNOTES

1. PROVIDE LOCAL SWITCH PER CEnC 130.1(a).
2. NOT USED.
3. NOT USED.
4. PROVIDE AUTOMATIC FULL-OFF AND PARTIAL ON VIA OCCUPANCY SENSORS PER CEnC 130.1(c).

LIGHTING CONTROL NOTES

THE LUMINAIRES IN EACH AREA MUST BE INDEPENDENTLY CONTROLLED FROM LUMINAIRES IN OTHER AREAS BY MANUAL LIGHTING CONTROLS THAT PROVIDE ON / OFF FUNCTIONALITY.
THE ENERGY STANDARDS CALL FOR A MANUAL SWITCH TO BE LOCATED IN THE SAME ROOM OR AREA AS THE LIGHTING IT CONTROLS. ALTHOUGH LIGHTING CONTROL SOFTWARE APPLICATIONS FOR MOBILE DEVICES ARE INCREASING IN AVAILABILITY AND LIGHTING MAY BE CONTROLLABLE THROUGH THESE POINTS, IT IS STILL NECESSARY TO INSTALL A SWITCH. OTHER INSTALLED CONTROLS MAY NOT OVERRIDE MANUAL CONTROLS.

UP TO 0.2 WATTS PER SQUARE FOOT OF LIGHTING MAY REMAIN ON DURING OCCUPIED HOURS FOR EMERGENCY EGRESS, BUT ONLY IN BUILDING SPACES DESIGNATED FOR EMERGENCY EGRESS ON BUILDING. AFTER HOURS, ONLY 0.1 WATTS PER SQUARE FOOT IS ALLOWED TO REMAIN ON. CONTROL SWITCHES FOR THE EGRESS LIGHTING MUST NOT BE ACCESSIBLE TO UNAUTHORIZED PERSONNEL.

LA

ROOM
MOUNTING FLUSH
FED FROM UTILITY
NOTE EXISTING

VOLTS 208Y/120V 3P 4W
BUS AMPS 225
NEUTRAL 100%

AIC EXISTING
MAIN BKR 100
LUGS STANDARD

CKT #	CKT BKR	CIRCUIT DESCRIPTION	LOAD KVA A	LOAD KVA B	LOAD KVA C	CKT #	CKT BKR	CIRCUIT DESCRIPTION	LOAD KVA A	LOAD KVA B	LOAD KVA C
1	20/1	EXISTING	0.9			2	20/1	EXISTING	0.9		
3	20/1	EXISTING		0.9		4	20/1	EXISTING		0.5	
5	20/1	EXISTING			0.9	6	20/1	EXISTING			0.9
7	20/1	EXISTING	0.9			8	20/1	EXISTING	0.9		
9	20/1	EXISTING		1		10	20/1	EXISTING		0.9	
11	20/1	EXISTING			1	12	20/1	EXISTING			0.9
13	20/1	EXISTING	0.5			14	20/1	EXISTING	0.9		
15	20/1	EXISTING		0.9		16	20/1	EXISTING		0.9	
17	20/1	EXISTING			0.7	18	20/1	EXISTING			0.9
19	20/1	EXISTING	0.9			20	20/1	EXISTING	0.5		
21	20/1	EXISTING		1		22	20/1	EXISTING		0.9	
23	20/1	EXISTING			0.9	24	20/1	EXISTING			0.9
25	20/1	EXISTING	0.9			26	20/1	EXISTING	0.9		
27	20/1	EXISTING		0.9		28	20/1	EF-1, ELECTRIC TOILET, LIGHTING, RECEPTACLE		0.373	
29	20/1	EXISTING			0.9	30	20/1	IWH-1			2.4
								TOTAL CONNECTED KVA BY PHASE	8.2	8.27	10.4

	CONN KVA	CALC KVA	
LIGHTING	0.013	0.016	(125%)
LARGEST MOTOR	0.08	0.02	(25%)

	CONN KVA	CALC KVA	
MOTORS	2.08	2.08	(100%)
RECEPTACLES	21.4	15.7	(50%>10)
NONCONTINUOUS	3.4	3.4	(100%)
TOTAL LOAD		21.2	
BALANCED 3-PHASE AMPS		58.9	

FIRST SUBMITTAL 08.21.19

G K A ARCHITECTS

BUILDING ALTERATIONS

THOUSAND OAKS COMMUNITY CENTER
CHILDREN'S RESTROOM
2525 MOORPARK RD.,
THOUSAND OAKS, CA 91362

CLIENT: CONEJO RECREATION & PARK DISTRICT

Architect
G. Korn, AIA
GKA Architects
1301 N La Brea Ave
Inglewood, CA 90302
gkorn@gka-arc.com

A & N DESIGN GROUP
MECHANICAL· PLUMBING· ELECTRICAL
21550 OXNARD STREET #300
WOODLAND HILLS, CA 91367
TEL: (818)-288-4361
FAX: (818)-758-0087

REGISTERED PROFESSIONAL ENGINEER
AMIR AMIRIRAZAVIAN
No. E20918
Exp. 09/30/20
ELECTRICAL
STATE OF CALIFORNIA

No.	Description	Date

Project number	
Date	08.21.19
Drawn by	AN
Checked by	AN

Drawing Name
LIGHTING AND POWER PLAN

Drawing No.
E1.00

NOTE: DO NOT SCALE DRAWINGS
Scale AS SHOWN

STATE OF CALIFORNIA
INDOOR LIGHTING
CEC-NRCC-LTI-01-E (Revised 04/19) — CALIFORNIA ENERGY COMMISSION

CERTIFICATE OF COMPLIANCE	NRCC-LTI-01-E
Indoor Lighting	(Page 1 of 6)
Project Name: THOUSAND OAKS COMMUNITY CENTER CHILDREN'S RESTROOM.	Date Prepared: 08/20/19

A. General Information

Climate Zone: 9	Conditional Floor Area: 61				
	Unconditional Floor Area:				
Building Type:	☑ Nonresidential	☐ High-Rise Residential	☐ Hotel/Motel		
☐ Schools	☐ Relocatable Public Schools	☑ Conditioned Spaces	☐ Unconditioned Spaces		
Phase of Construction:	☐ New Construction	☐ Addition	☑ Alteration		
Method of Compliance:	☐ Complete Building	☑ Area Category	☐ Tailored		
Project Address: 2525 MOORPARK RD., THOUSAND OAKS, CA 91362					

B. Lighting Compliance Documents (select yes for each document included)

For detailed instructions on the use of this and all Energy Efficiency Standards compliance documents, refer to the Nonresidential Manual published by the California Energy Commission.

YES	NO	COMP. DOC.	TITLE
◉	○	NRCC-LTI-01-E	Certificate of Compliance. All Pages required on plans for all submittals.
◉	○	NRCC-LTI-02-E	Lighting Controls, Certificate of Compliance, and PAF Calculation. All Pages required on plans for all submittals.
◉	○	NRCC-LTI-03-E	Indoor Lighting Power Allowance
○	◉	NRCC-LTI-04-E	Tailored Method Worksheets
○	◉	NRCC-LTI-05-E	Line Voltage Track Lighting Worksheets
○	○	NRCC-LTI-06-E	Indoor Lighting Existing Conditions

STATE OF CALIFORNIA
INDOOR LIGHTING
CEC-NRCC-LTI-01-E (Revised 04/19) — CALIFORNIA ENERGY COMMISSION
CERTIFICATE OF COMPLIANCE — NRCC-LTI-01-E
Indoor Lighting (Page 2 of 6)
Project Name: THOUSAND OAKS COMMUNITY CENTER CHILDREN'S RESTROOM. — Date Prepared: 08/20/19

C. Summary of Allowed Lighting Power

Conditioned and Unconditioned space Lighting must not be combined for compliance

	Indoor Lighting Power for Conditioned Spaces		Watts	Indoor Lighting Power for Unconditioned Spaces		Watts
01	**Installed** Lighting NRCC-LTI-01-E, Table H, page 5	+	12.8	**Installed** Lighting NRCC-LTI-01-E, Table H, page 5	+	
02	Portable Only for Offices NRCC-LTI-01-E, Table G, page 4	+				
03	Minus Lighting Control Credits NRCC-LTI-02-E, page 2	-		Minus Lighting Control Credits NRCC-LTI-02-E, page 2	-	
04	Adjusted **Installed** Lighting Power (row 1 plus row 2 minus row 3)	=	12.8	Adjusted **Installed** Lighting Power (row 1 minus row 3)	=	0
	Complies ONLY if **Installed** ≤ **Allowed** (Box 04 < Box 05)			Complies ONLY if **Installed** ≤ **Allowed** (Box 04 < Box 05)		
05	**Allowed** Lighting Power Conditioned NRCC-LTI-03-E, page 1 — Alterations with replacement luminaires that have at least 50/35%lower power compared to the original existing luminaires, may instead use the allowed wattage from NRCC-LTI-06, page 2		36.6	**Allowed** Lighting Power Unconditioned NRCC-LTI-03-E, page 1 — Alterations with replacement luminaires that have at least 50/35% lower power compared to the original existing luminaires, may instead use the allowed wattage from NRCC-LTI-06, page 2		

D. Declaration of Required Certificates of Installation

Declare by selecting yes for all of the Certificates that will be submitted. (Retain copies and verify forms are completed and signed.)

YES	NO	Form/Title	
◉	○	NRCI-LTI-01-E - Must be submitted for all buildings	☐ Field Inspector
◉	○	NRCI-LTI-02-E - Must be submitted for a lighting control system, or for an Energy Management Control System (EMCS), to be recognized for compliance.	☐ Field Inspector
◉	○	NRCI-LTI-03-E - Must be submitted for a line-voltage track lighting integral current limiter, or for a supplementary overcurrent protection panel used to energize only line-voltage track lighting, to be recognized for compliance.	☐ Field Inspector
○	◉	NRCI-LTI-04-E - Must be submitted for two interlocked systems serving an auditorium, a convention center, a conference room, a multipurpose room, or a theater to be recognized for compliance.	☐ Field Inspector
○	◉	NRCI-LTI-05-E - Must be submitted for a Power Adjustment Factor (PAF) to be recognized for compliance.	☐ Field Inspector
○	◉	NRCI-LTI-06-E - Must be submitted for additional wattage installed in a video conferencing studio to be recognized for compliance.	☐ Field Inspector

STATE OF CALIFORNIA
INDOOR LIGHTING
CEC-NRCC-LTI-01-E (Revised 04/19) — CALIFORNIA ENERGY COMMISSION
CERTIFICATE OF COMPLIANCE — NRCC-LTI-01-E
Indoor Lighting (Page 3 of 6)
Project Name: THOUSAND OAKS COMMUNITY CENTER CHILDREN'S RESTROOM. — Date Prepared: 08/20/19

E. Declaration of Required Certificates of Acceptance

Declare by selecting yes for all of the Certificates of Acceptance that will be submitted. (Retain copies and verify forms are completed and signed.)

YES	NO	FORM/TITLE	
◉	○	NRCA-LTI-02-A - Must be submitted for occupancy sensors and automatic time switch controls.	☐ Field Inspector
○	◉	NRCA-LTI-03-A - Must be submitted for automatic daylight controls.	☐ Field Inspector
○	◉	NRCA-LTI-04-A - Must be submitted for demand responsive lighting controls.	☐ Field Inspector
○	◉	NRCA-LTI-05-A - Must be submitted for institutional tuning power adjustment factor (PAF).	

A Separate Lighting Schedule Must Be Filled Out for Conditioned and Unconditioned Spaces. Installed Lighting Power listed on this Lighting Schedule is only for: ☑ **CONDITIONED SPACE** ☐ **UNCONDITIONED SPACE**

F. Indoor Lighting Schedule and Field Inspection Energy Checklist

- ☐ The actual indoor lighting power listed on the next 2 pages includes all installed permanent and planned portable lighting systems.
- ☐ When Complete Building Method is used for compliance, list each different type of luminaire on separate lines.
- ☐ When Area Category Method or Tailored Method is used for compliance, list each different type of luminaire by each different function area on separate lines
- ☐ Also include track lighting in schedule, and submit the track lighting compliance document (NRCC-LTI-05-E) when line-voltage track lighting is installed.

STATE OF CALIFORNIA
INDOOR LIGHTING
CEC-NRCC-LTI-01-E (Revised 04/19) — CALIFORNIA ENERGY COMMISSION
CERTIFICATE OF COMPLIANCE — NRCC-LTI-01-E
Indoor Lighting (Page 4 of 6)
Project Name: THOUSAND OAKS COMMUNITY CENTER CHILDREN'S RESTROOM. — Date Prepared: 08/20/19

G. Installed Portable Luminaires in Offices – Exceptior to Section 140.6(a)

- This section shall be filled out ONLY for portable luminaires in offices (As defined in §100.1). All other planned portable luminaires shall be documented on next page of this compliance document.
- This section is used to determine if greater than 0.3 watts of portable lighting is planned for any office
- Fill out a separate line for each different office. Small offices that are typical (having the same general and portable lighting) may be grouped together. This allowance shall not be traded between offices having different lighting systems.

Office Portable Luminaire Schedule			Office Installed Portable Luminaire W/ft²					Office Location	Field Inspector	
01	02	03	04	05	06	07	08	09	10	
Complete Luminaire Description (i.e., LED, under cabinet, furniture mounted direct/indirect)	Watts per Luminaire	Number of Luminaires	Installed portable luminaire watts in this office (G02 x G03)	Square feet of this office	Watts per square foot (G04 / G05)	If G06 ≤ 0.3, enter zero; If G06 > 0.3, (G06-0.3)	(G05 x G07)	Identify Office area in which these portable luminaires are installed	Pass	Fail
			0				0		○	○
			0				0		○	○
			0				0		○	○
			0				0		○	○
			0				0		○	○
			0				0		○	○
Total installed portable luminaire watts that are greater than 0.3 W/ft² per office:								Enter sum total of all pages into NRCC-LTI-01-E; Page 2		

STATE OF CALIFORNIA
INDOOR LIGHTING
CEC-NRCC-LTI-01-E (Revised 04/19) — CALIFORNIA ENERGY COMMISSION
CERTIFICATE OF COMPLIANCE — NRCC-LTI-01-E
Indoor Lighting (Page 5 of 6)
Project Name: THOUSAND OAKS COMMUNITY CENTER CHILDREN'S RESTROOM. — Date Prepared: 08/20/19

A Separate Lighting Schedule Must Be Filled Out for Conditioned and Unconditioned Spaces. Installed Lighting Power listed on this Lighting Schedule is only for:
☑ **CONDITIONED SPACE** ☐ **UNCONDITIONED SPACE**

H. Indoor Lighting Schedule and Field Inspection Energy Checklist

Luminaire Schedule			Installed Watts					Location	Field Inspector[3]	
01	02	03	04		05	06		07	08	
Name or Item Tag	Complete Luminaire Description (i.e, 3 lamp fluorescent troffer, F32T8, one dimmable electronic ballast)	Watts per Luminaire	How wattage was determined: CEC Default from NAS	How wattage was determined: According to §130.0(c)	Number Luminaires	Total Installed Watts in this area (G03 x G05)		Primary Function area in which these luminaires are installed	Pass	Fail
A	6' RECESSED LIGHT, LED, DIM.DRIVER	12.8	☐	☑	1	12.8		RESTROOM	○	○
			☐	☑		0			○	○
			☐	☑		0			○	○
			☐	☑		0			○	○
			☐	☑		0			○	○
			☐	☑		0			○	○
			☐	☑		0			○	○
			☐	☑		0			○	○
			☐	☑		0			○	○
INSTALLED WATTS PAGE TOTAL:						12.8		Enter sum total of all pages into NRCC-LTI-01-E; Page 2	12.8	

STATE OF CALIFORNIA
INDOOR LIGHTING
CEC-NRCC-LTI-01-E (Revised 04/19) — CALIFORNIA ENERGY COMMISSION
CERTIFICATE OF COMPLIANCE — NRCC-LTI-01-E
Indoor Lighting (Page 6 of 6)
Project Name: THOUSAND OAKS COMMUNITY CENTER CHILDREN'S RESTROOM. — Date Prepared: 08/20/19

DOCUMENTATION AUTHOR'S DECLARATION STATEMENT

1. I certify that this Certificate of Compliance documentation is accurate and complete.

Documentation Author Name:	AMIR AMIRI	Documentation Author Signature:	
Company:	A & N DESIGN GROUP	Signature Date:	08/20/19
Address:	21550 OXNARD STREET #300	CEA Certification Identification (if applicable):	
City/State/Zip:	WOODLAND HILLS | CA 91367	Phone:	818-288-4361

RESPONSIBLE PERSON'S DECLARATION STATEMENT

I certify the following under penalty of perjury, under the laws of the State of California:

1. The information provided on this Certificate of Compliance is true and correct.
2. I am eligible under Division 3 of the Business and Professions Code to accept responsibility for the building design or system design identified on this Certificate of Compliance (responsible designer).
3. The energy features and performance specifications, materials, components, and manufactured devices for the building design or system design identified on this Certificate of Compliance conform to the requirements of Title 24, Part 1 and Part 6 of the California Code of Regulations.
4. The building design features or system design features identified on this Certificate of Compliance are consistent with the information provided on other applicable compliance documents, worksheets, calculations, plans and specifications submitted to the enforcement agency for approval with this building permit application.
5. I will ensure that a completed signed copy of this Certificate of Compliance shall be made available with the building permit(s) issued for the building, and made available to the enforcement agency for all applicable inspections. I understand that a completed signed copy of this Certificate of Compliance is required to be included with the documentation the builder provides to the building owner at occupancy.

Responsible Designer Name:	AMIR AMIRI	Responsible Designer Signature:	
Company:	A & N DESIGN GROUP	Date Signed:	08/23/19
Address:	21550 OXNARD STREET #300	License:	E20918
City/State/Zip:	WOODLAND HILLS | CA 91367	Phone:	818-288-4361

FIRST SUBMITTAL 08.21.19

G K A ARCHITECTS

BUILDING ALTERATIONS

THOUSAND OAKS COMMUNITY CENTER
CHILDREN'S RESTROOM
2525 MOORPARK RD.,
THOUSAND OAKS, CA 91362

CLIENT: CONEJO RECREATION & PARK DISTRICT

Architect
G. Korn, AIA
GKA Architects
1301 N La Brea Ave
Inglewood, CA 90302
gkorn@gka-arc.com

A & N DESIGN GROUP
MECHANICAL · PLUMBING · ELECTRICAL
21550 OXNARD STREET #300
WOODLAND HILLS, CA 91367
TEL: (818)-288-4361
FAX: (818)-758-0087

REGISTERED PROFESSIONAL ENGINEER
AMIR AMIRIRAZAVIAN
No. E20918
Exp. 09/30/20
ELECTRICAL
STATE OF CALIFORNIA

No.	Description	Date

Project number	
Date	08.21.19
Drawn by	AN
Checked by	AN
Drawing Name	ENERGY T-24
Drawing No.	T0.01
NOTE: DO NOT SCALE DRAWINGS Scale	-

STATE OF CALIFORNIA

INDOOR LIGHTING – LIGHTING CONTROLS

CEC-NRCC-LTI-02-E (Revised 01/16)
CALIFORNIA ENERGY COMMISSION

CERTIFICATE OF COMPLIANCE	NRCC-LTI-02-E
Indoor Lighting - Lighting Controls	(Page 1 of 3)
Project Name: THOUSAND OAKS COMMUNITY CENTER CHILDREN'S RESTROOM.	Date Prepared: 08/20/19

A. Mandatory Lighting Control Declaration Statements (Indicate if the measure applies by checking yes or no below.)

YES	NO	Control Requirements
●	○	Lighting shall be controlled by self-contained lighting control devices which are certified to the Energy Commission according to the Title 20 Appliance Efficiency Regulations in accordance with Section 110.9.
●	○	Lighting shall be controlled by a lighting control system or energy management control system in accordance with §110.9. An Installation Certificate shall be submitted in accordance with Section 130.4(b).
○	●	One or more Track Lighting Integral Current Limiters shall be installed which have been certified to the Energy Commission in accordance with §110.9 and §130.0. Additionally, an Installation Certificate shall be submitted in accordance with Section 130.4(b).
○	●	A Track Lighting Supplementary Overcurrent Protection Panel shall be installed in accordance with Section 110.9 and Section 130.0. Additionally, an Installation Certificate shall be installed in accordance with Section 130.4(b).
●	○	All lighting controls and equipment shall comply with the applicable requirements in §110.9 and shall be installed in accordance with the manufacturer's instructions in accordance with Section 130.1.
●	○	All luminaires shall be functionally controlled with manual ON and OFF lighting controls in accordance with Section 130.1(a).
●	○	General lighting shall be separately controlled from all other lighting systems in an area. Floor and wall display, window display, case display, ornamental, and special effects lighting shall each be separately controlled on circuits that are 20 amps or less. When track lighting is used, general, display, ornamental, and special effects lighting shall each be separately controlled; in accordance with Section 130.1(a)4.
●	○	The general lighting of any enclosed area 100 square feet or larger, with a connected lighting load that exceeds 0.5 watts per square foot shall meet the multi-level lighting control requirements in accordance with Section 130.1(b).
●	○	All installed indoor lighting shall be equipped with controls that meet the applicable Shut-OFF control requirements in Section 130.1(c).
○	●	Lighting in all Daylit Zones shall be controlled in accordance with the requirements in Section 130.1(d) and daylit zones are shown on the plans.
○	●	Lighting power in buildings larger than 10,000 square feet shall be capable of being automatically reduced in response to a Demand Responsive Signal in accordance with Section 130.1(e).
●	○	Before an occupancy permit is granted for a newly constructed building or area, or a new lighting system serving a building, area, or site is operated for normal use, indoor lighting controls serving the building, area, or site shall be certified as meeting the Acceptance Requirements for Code Compliance in accordance with Section 130.4.(a). The controls required to meet the Acceptance Requirements include automatic daylight controls, automatic shut-OFF controls, and demand responsive controls.

STATE OF CALIFORNIA

INDOOR LIGHTING – LIGHTING CONTROLS

CEC-NRCC-LTI-02-E (Revised 01/16)
CALIFORNIA ENERGY COMMISSION

CERTIFICATE OF COMPLIANCE	NRCC-LTI-02-E
Indoor Lighting - Lighting Controls	(Page 2 of 3)
Project Name: THOUSAND OAKS COMMUNITY CENTER CHILDREN'S RESTROOM.	Date Prepared: 08/20/19

A separate document must be filled out for Conditioned and Unconditioned Spaces. This page is used only for the following:
☑ CONDITIONED SPACES ☐ UNCONDITIONED SPACES

B. Mandatory and Prescriptive Indoor Lighting Control Schedule, PAF Calculation, and Field Inspection Checklist

Lighting Control Schedule			Standards Complying With [1] (✓ all that apply, or leave empty if Exempted)							PAF Credit Calculation [2]			✓ if Acceptance Test Required	Field Inspector	
										Watts of Controlled Lighting	PAF	Control Credit (11 x 12)			
01	02	03	04	05	06	07	08	09	10	11	12	13	14	15	
Location in Building	Type/ Description of Lighting Control (i.e.: occupancy sensor, automatic time switch, dimmer, automatic daylight, etc...)	# of Units	§130.1(a)	§130.0(b)	§130.1(c)	§130.1(d)	§130.1(e)	§140.6(a)2	§140.6(d)					Pass	Fail
RESTROOM	MANUAL/DIMMING/OS (DAYLIT)	2	●	●	●	●	●					0	☐	○	○
			●	●	●	●	●					0	☐	○	○
												0	☐	○	○
												0	☐	○	○
												0	☐	○	○
												0	☐	○	○
												0	☐	○	○
Control Credit PAGE TOTAL (Sum of Column 13):												0			
IF MULTIPLE PAGES ARE USED, ENTER SUM TOTAL OF Control Credit for all pages HERE (Sum of all Column 13):															
												Enter Control Credit total into NRCC-LTI-01-E; Page 1.			

1. §130.1(a) = Manual area controls; §130.0(b) = Multi Level; §130.1(c) = Auto Shut-Off; §130.1(d) = Mandatory Daylight; §130.1(e) = Demand Responsive; §140.6(d) = Additional lighting controls installed to earn a PAF; §140.6(d) = Prescriptive Secondary Sidelit Daylight Controls.

2. Check Table 140.6-A for correct Factor. PAFs shall not be traded between conditioned and unconditioned spaces. As a condition to earn a PAF, an Installation Certificate is also required to be filled out, signed, and submitted.

STATE OF CALIFORNIA

INDOOR LIGHTING – LIGHTING CONTROLS

CEC-NRCC-LTI-02-E (Revised 01/16)
CALIFORNIA ENERGY COMMISSION

CERTIFICATE OF COMPLIANCE	NRCC-LTI-02-E
Indoor Lighting - Lighting Controls	(Page 3 of 3)
Project Name: THOUSAND OAKS COMMUNITY CENTER CHILDREN'S RESTROOM.	Date Prepared: 08/20/19

DOCUMENTATION AUTHOR'S DECLARATION STATEMENT

1. I certify that this Certificate of Compliance documentation is accurate and complete.

Documentation Author Name: AMIR AMIRI	Documentation Author Signature:
Company: A & N DESIGN GROUP	Signature Date: 08/20/19
Address: 21550 OXNARD STREET #300	CEA Certification Identification (if applicable):
City/State/Zip: WOODLAND HILLS |CA 91367	Phone: 818-288-4361

RESPONSIBLE PERSON'S DECLARATION STATEMENT

I certify the following under penalty of perjury, under the laws of the State of California:

1. The information provided on this Certificate of Compliance is true and correct.
2. I am eligible under Division 3 of the Business and Professions Code to accept responsibility for the building design or system design identified on this Certificate of Compliance (responsible designer).
3. The energy features and performance specifications, materials, components, and manufactured devices for the building design or system design identified on this Certificate of Compliance conform to the requirements of Title 24, Part 1 and Part 6 of the California Code of Regulations.
4. The building design features or system design features identified on this Certificate of Compliance are consistent with the information provided on other applicable compliance documents, worksheets, calculations, plans and specifications submitted to the enforcement agency for approval with this building permit application.
5. I will ensure that a completed signed copy of this Certificate of Compliance shall be made available with the building permit(s) issued for the building, and made available to the enforcement agency for all applicable inspections. I understand that a completed signed copy of this Certificate of Compliance is required to be included with the documentation the builder provides to the building owner at occupancy.

Responsible Designer Name: AMIR AMIRI	Responsible Designer Signature:
Company: A & N DESIGN GROUP	Date Signed: 08/20/19
Address: 21550 OXNARD STREET #300	License: E20918
City/State/Zip: WOODLAND HILLS | CA 91367	Phone: 818-288-4361

STATE OF CALIFORNIA

INDOOR LIGHTING POWER ALLOWANCE

CEC-NRCC-LTI-03-E (Revised 04/16)
CALIFORNIA ENERGY COMMISSION

CERTIFICATE OF COMPLIANCE	NRCC-LTI-03-E
Certificate of Compliance - Indoor Lighting Power Allowance	(Page 1 of 4)
Project Name: THOUSAND OAKS COMMUNITY CENTER CHILDREN'S RESTROOM.	Date Prepared: 08/20/19

A separate page must be filled out for Conditioned and Unconditioned Spaces. This page is only for:
☑ CONDITIONED spaces ☐ UNCONDITIONED spaces

A. SUMMARY TOTALS OF LIGHTING POWER ALLOWANCES

If using Complete Building Method for compliance, use only the total in column (a) as total allowed building watts.
If using Area Category Method, Tailored Method, or a combination of Area Category and Tailored Method for compliance, use only the total in column (b) as the total allowed building watts

	(a)	(b)
01 Complete Building Method Allowed Watts. Documented in section B of NRCC-LTI-03-E (below on this page)	0	
02 Area Category Method Allowed Watts. Documented in section C-1 of NRCC-LTI-03-E (below on this page)		36.6
03 Tailored Method Allowed Watts. Documented in section A of NRCC-LTI-04-E		
TOTAL ALLOWED BUILDING WATTS. Enter number into correct cell on NRCC-LTI-01, Page 2, Row 1	0	36.6

☑ Check here if building contains both conditioned and unconditioned areas.

B. COMPLETE BUILDING METHOD LIGHTING POWER ALLOWANCE

01	02		03		04
TYPE OF BUILDING (From §140.6 Table 140.6-B)	WATTS PER ft²	X	COMPLETE BLDG. AREA	=	ALLOWED WATTS
All others buildings					0
Total Area:					
Total Watts. Enter Tota Watts into section A, row 1 (Above on this page)					0

C -1 AREA CATEGORY METHOD TOTAL LIGHTING POWER ALLOWANCES	**Watts**
Total from section C-2.	36.6
Total from section C-3.	
Total Watts. Enter Total Watts into section A, row 2 (Above on this page).	36.6

For Alterations Only – Reduced lighting power option (Total Allowed Watts x 0.85). Enter this value into section A, row 2 if using this option.

STATE OF CALIFORNIA

INDOOR LIGHTING POWER ALLOWANCE

CEC-NRCC-LTI-03-E (Revised 04/16)
CALIFORNIA ENERGY COMMISSION

CERTIFICATE OF COMPLIANCE	NRCC-LTI-03-E
Certificate of Compliance - Indoor Lighting Power Allowance	(Page 2 of 4)
Project Name: THOUSAND OAKS COMMUNITY CENTER CHILDREN'S RESTROOM.	Date Prepared: 08/20/19

A separate page must be filled out for Conditioned and Unconditioned Spaces. This page is only for:
☑ CONDITIONED spaces ☐ UNCONDITIONED spaces

C -2 AREA CATEGORY METHOD GENERAL LIGHTING POWER ALLOWANCE

- Do not include portable lighting for offices. Portable lighting for offices shall be documented only in Section G of NRCC-LTI-01-E.
- Separately list lighting for each primary function area as defined in §100.1 of the Standards.

01		02		03		04
AREA CATEGORY (From §140.6 Table 140.6-C)		WATTS PER ft²	X	AREA (ft²)	=	ALLOWED WATTS
Location in Building	Primary Function Area per Table 140.6-C					
FIRST FLOOR RESTROOM	RESTROOM	0.6		61		36.6
						0
						0
						0
						0
						0
						0
						0
						0
						0
						0
						0
						0
						0
						0
						0
			TOTALS	61		
Enter sum total Area Category allowed watts into section C-1 of NRCC-LTI-03-E (this compliance document)						36.6
						WATTS

STATE OF CALIFORNIA

INDOOR LIGHTING POWER ALLOWANCE

CEC-NRCC-LTI-03-E (Revised 04/16)
CALIFORNIA ENERGY COMMISSION

CERTIFICATE OF COMPLIANCE	NRCC-LTI-03-E
Certificate of Compliance - Indoor Lighting Power Allowance	(Page 3 of 4)
Project Name: THOUSAND OAKS COMMUNITY CENTER CHILDREN'S RESTROOM.	Date Prepared: 08/20/19

A separate page must be filled out for Conditioned and Unconditioned Spaces. This page is only for:
☑ CONDITIONED spaces ☐ UNCONDITIONED spaces

C-3 AREA CATEGORY METHOD ADDITIONAL LIGHTING WATTAGE ALLOWANCE (from Table 140.6-C Footnotes)

01	02	03 [2]	04	05	06	07
Primary Function	Sq Ft or Linear ft [1]	Additional Watts Allowed	Wattage Allowance (02 x 03)	Description(s) and Quantity of Special Luminaire Types in each Primary Function Area	Total Design Watts [3]	ALLOWED WATTS Smaller of 04 or 06
			0			
			0			
			0			
			0			
			0			
			0			
			0			
			0			
			0			
			0			
			0			
			0			
			0			
			0			
			0			
			0			
			0			
			0			
TOTALS – Enter into TOTAL AREA CATEGORY METHOD ADDITIONAL ALLOWANCES – Section C-1						

1. Use linear feet only for additional allowance for white board or chalk board. All other additional Area Category allowances shall use watts per square foot.
2. Additional watts are available only when allowed according to the footnotes on bottom of Table 140.6-C, which include: Specialized task work; Ornamental lighting; Precision commercial and industrial work; Per linear foot of white board or chalk board; Accent, display and feature lighting; and Videoconferencing studio lighting..
3. Luminaire classification and wattage shall be determined in accordance with §130.0(c) of the Standards.

STATE OF CALIFORNIA

INDOOR LIGHTING POWER ALLOWANCE

CEC-NRCC-LTI-03-E (Revised 04/16)
CALIFORNIA ENERGY COMMISSION

CERTIFICATE OF COMPLIANCE	NRCC-LTI-03-E
Certificate of Compliance - Indoor Lighting Power Allowance	(Page 4 of 4)
Project Name: THOUSAND OAKS COMMUNITY CENTER CHILDREN'S RESTROOM.	Date Prepared: 08/20/19

DOCUMENTATION AUTHOR'S DECLARATION STATEMENT

1. I certify that this Certificate of Compliance documentation is accurate and complete.

Documentation Author Name: AMIR AMIRI	Documentation Author Signature:
Company: A & N DESIGN GROUP	Signature Date: 08/20/19
Address: 21550 OXNARD STREET #300	CEA Certification Identification (if applicable):
City/State/Zip: WOODLAND HILLS |CA 91367	Phone: 818-288-4361

RESPONSIBLE PERSON'S DECLARATION STATEMENT

I certify the following under penalty of perjury, under the laws of the State of California:

1. The information provided on this Certificate of Compliance is true and correct.
2. I am eligible under Division 3 of the Business and Professions Code to accept responsibility for the building design or system design identified on this Certificate of Compliance (responsible designer).
3. The energy features and performance specifications, materials, components, and manufactured devices for the building design or system design identified on this Certificate of Compliance conform to the requirements of Title 24, Part 1 and Part 6 of the California Code of Regulations.
4. The building design features or system design features identified on this Certificate of Compliance are consistent with the information provided on other applicable compliance documents, worksheets, calculations, plans and specifications submitted to the enforcement agency for approval with this building permit application.
5. I will ensure that a completed signed copy of this Certificate of Compliance shall be made available with the building permit(s) issued for the building, and made available to the enforcement agency for all applicable inspections. I understand that a completed signed copy of this Certificate of Compliance is required to be included with the documentation the builder provides to the building owner at occupancy.

Responsible Designer Name: AMIR AMIRI	Responsible Designer Signature:
Company: A & N DESIGN GROUP	Date Signed: 08/20/19
Address: 21550 OXNARD STREET #300	License: E20918
City/State/Zip: WOODLAND HILLS | CA 91367	Phone: 818-288-4361

FIRST SUBMITTAL 08.21.19

G K A
ARCHITECTS

BUILDING ALTERATIONS

THOUSAND OAKS COMMUNITY CENTER
CHILDREN'S RESTROOM
2525 MOORPARK RD.,
THOUSAND OAKS, CA 91362

CLIENT: CONEJO RECREATION
& PARK DISTRICT

Architect

G. Korn, AIA
GKA Architects
1301 N La Brea Ave
Inglewood, CA 90302
gkorn@gka-arc.com

A & N DESIGN GROUP
MECHANICAL· PLUMBING· ELECTRICAL
21550 OXNARD STREET #300
WOODLAND HILLS, CA 91367
TEL: (818)-288-4361
FAX: (818)-758-0087

AMIR AMIRI RAZAVIAN
No. E20918
Exp. 09/30/20

No.	Description	Date

Project number	
Date	08.21.19
Drawn by	AN
Checked by	AN
Drawing Name	ENERGY T-24
Drawing No.	T0.02
NOTE: DO NOT SCALE DRAWINGS Scale -	Page 7 / 7