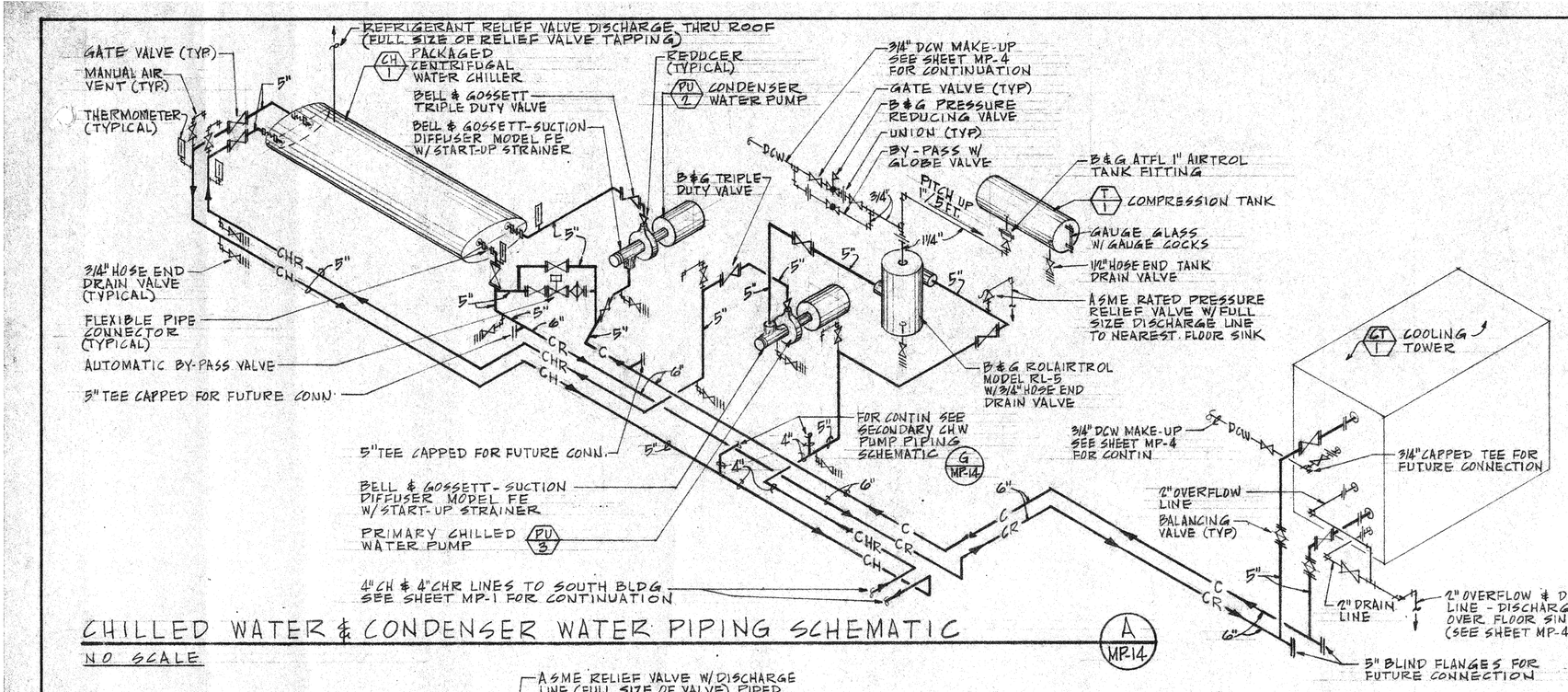

CHILLED WATER & CONDENSER WATER PIPING SCHEMATIC (A MP.14)

NO SCALE

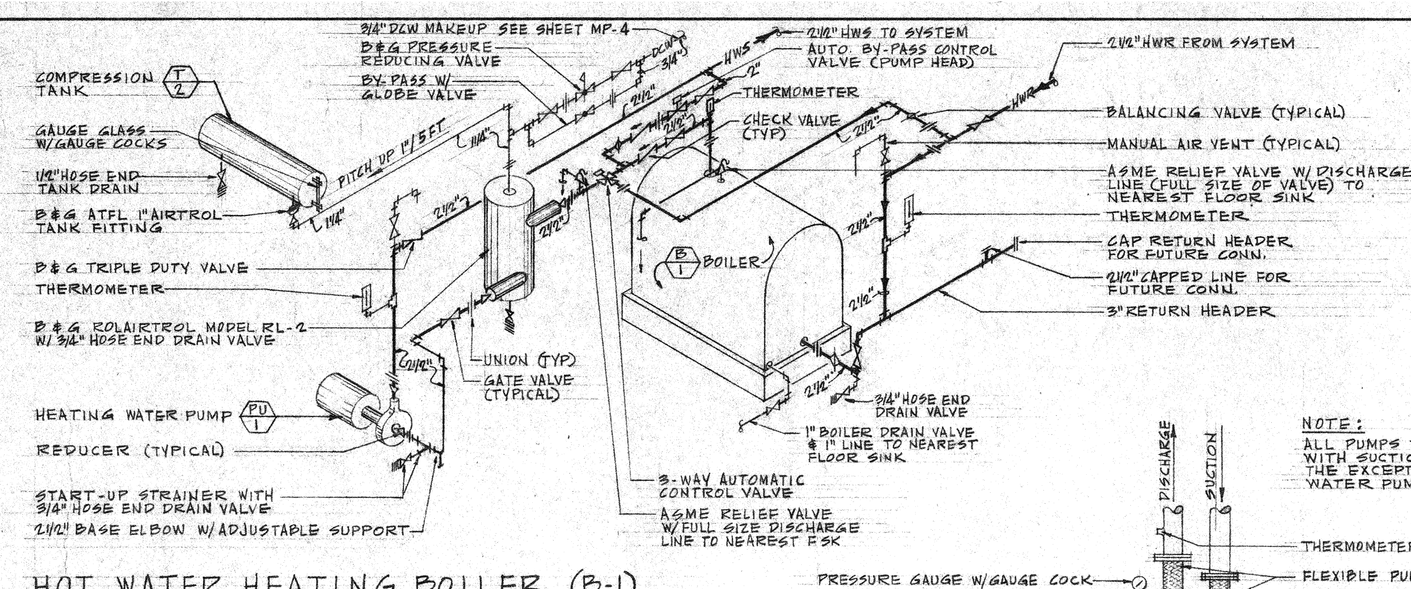

HOT WATER HEATING BOILER (B-1) PIPING SCHEMATIC (B MP.14)

NO SCALE

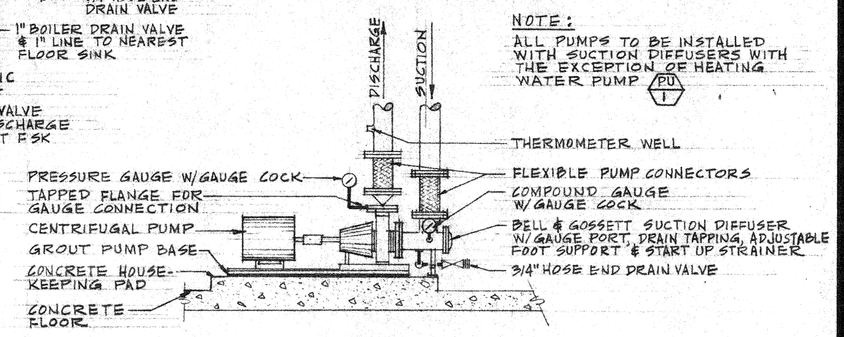

TYPICAL PUMP PIPING CONNECTION DETAIL (C MP.14)

NO SCALE

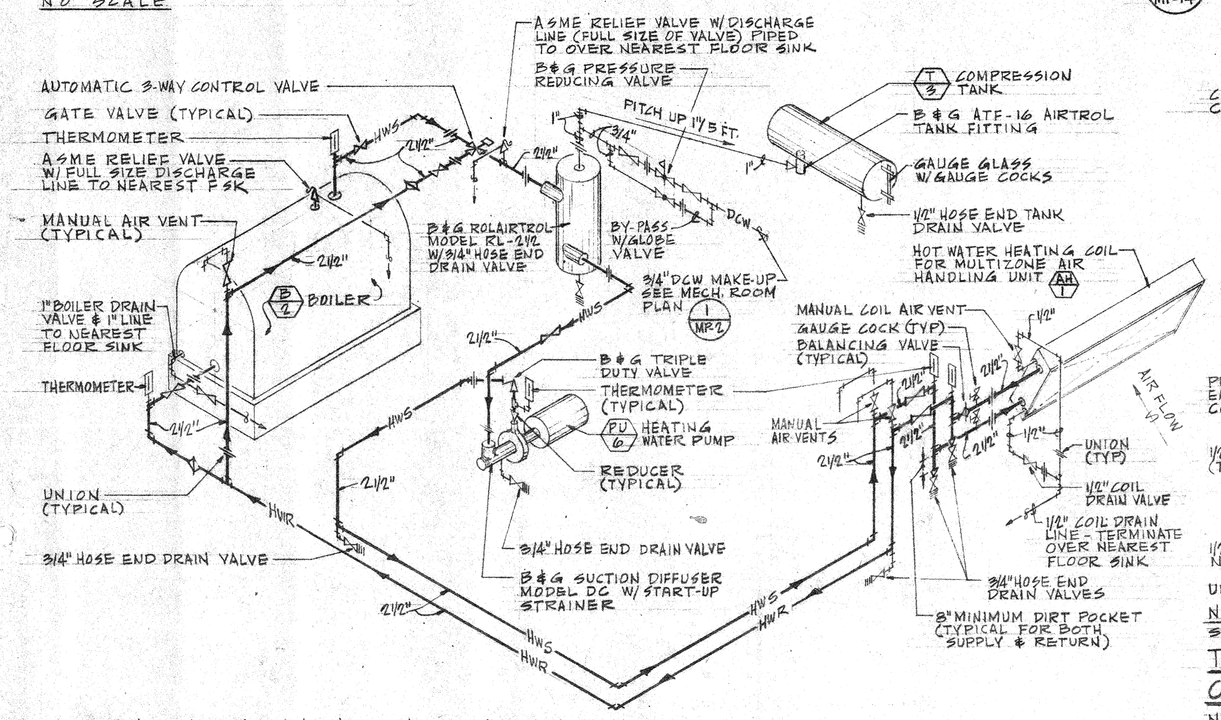

SOUTH BLDG HEATING WATER SYSTEM PIPING SCHEMATIC (D MP.14)

NO SCALE

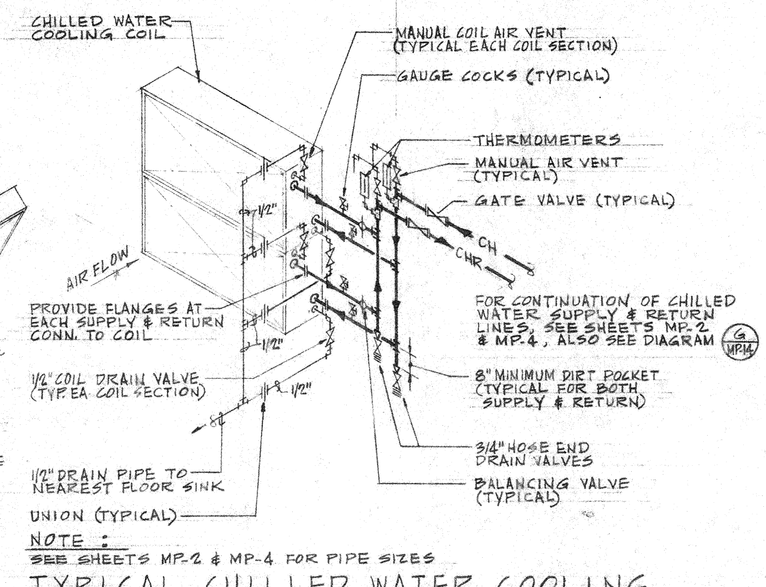

NOTE:
SEE SHEETS MP-2 & MP-4 FOR PIPE SIZES

TYPICAL CHILLED WATER COOLING COIL PIPING SCHEMATIC (E MP.14)

NO SCALE

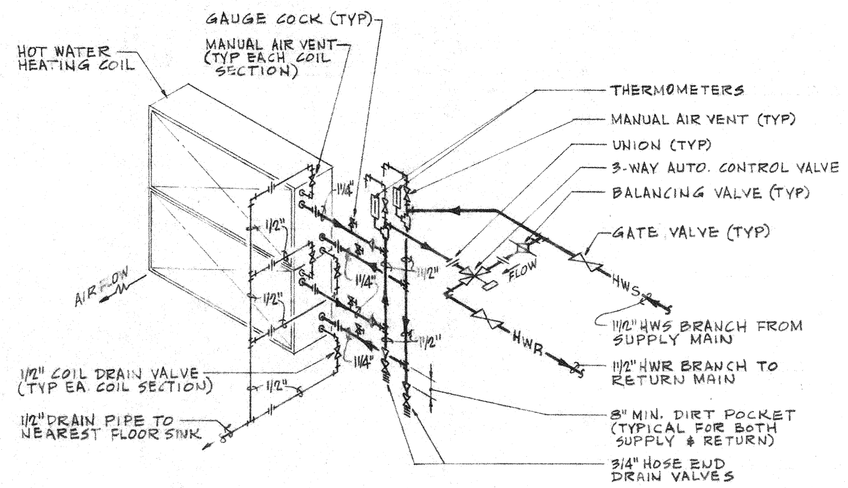

HOT WATER COIL (HC-1) PIPING SCHEMATIC (F MP.14)

NO SCALE

SECONDARY CHILLED WATER SYSTEM SCHEDULE				
SECONDARY PUMP NO.	B&G SUCTION DIFFUSER MODEL NO. (PUMP)	SECONDARY CH WATER PIPE SIZES	CROSSOVER BRIDGE PIPE SIZE	EQUIPMENT SERVED
PU 4	ED	4"	4"	CC 1
PU 5	DC	3"	3"	AH 1

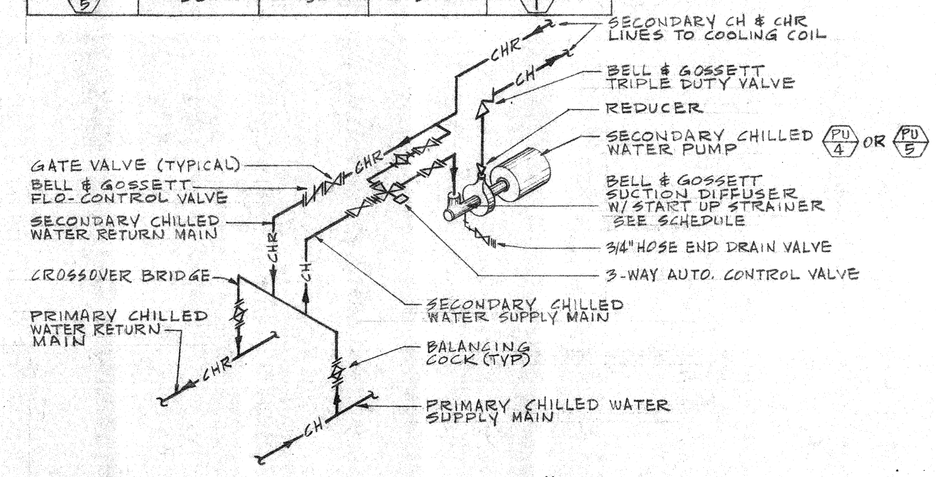

SECONDARY CHILLED WATER PUMPS (PU-4 & PU-5) PIPING SCHEMATIC (G MP.14)

NO SCALE

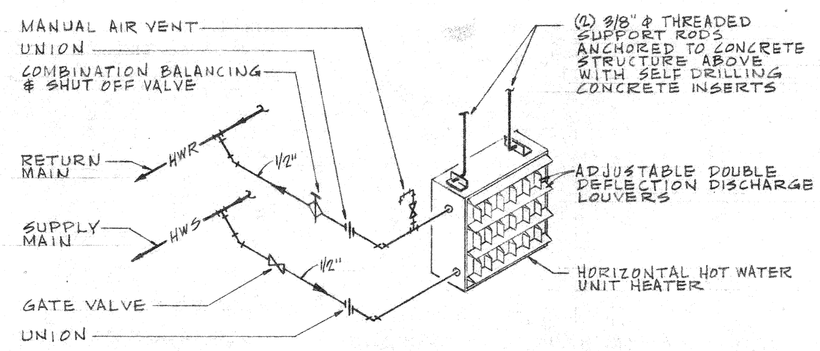

TYPICAL UNIT HEATER PIPING SCHEMATIC (H MP.14)

NO SCALE

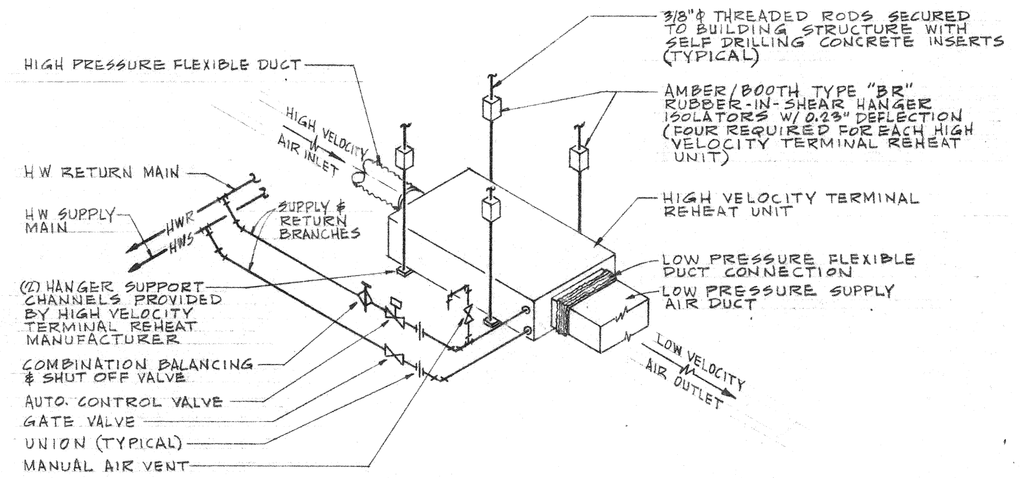

NOTES

1. ALL HIGH VELOCITY TERMINAL REHEAT UNITS ARE TO BE PIPED WITH THE AUTOMATIC CONTROL VALVE ARRANGEMENT AS SHOWN ABOVE WITH THE EXCEPTION OF UNIT TU-1 LOCATED ABOVE OFFICE "N-80". THIS UNIT SHALL HAVE A 3-WAY TYPE AUTOMATIC CONTROL VALVE.
2. SEE SHEETS MP-3 & MP-4 FOR SUPPLY & RETURN BRANCH LINE PIPE SIZES.

TYPICAL HIGH VELOCITY TERMINAL REHEAT UNIT PIPING SCHEMATIC (J MP.14)

NO SCALE

Blaylock Engineers
Mechanical and Electrical Engineering
1909 McKee Street, San Diego, Calif. 92110

ROBERT MASON HOUVENER ARCHITECT
7140 BESSEL AVENUE · LA JOLLA, CALIFORNIA 92037 · TEL. 714/459-4065

CIVIC CENTER
CITY OF THOUSAND OAKS, CALIFORNIA

DETAILS & DIAGRAMS
AIR CONDITIONING
REVISIONS:

MP 14
SHT. 72