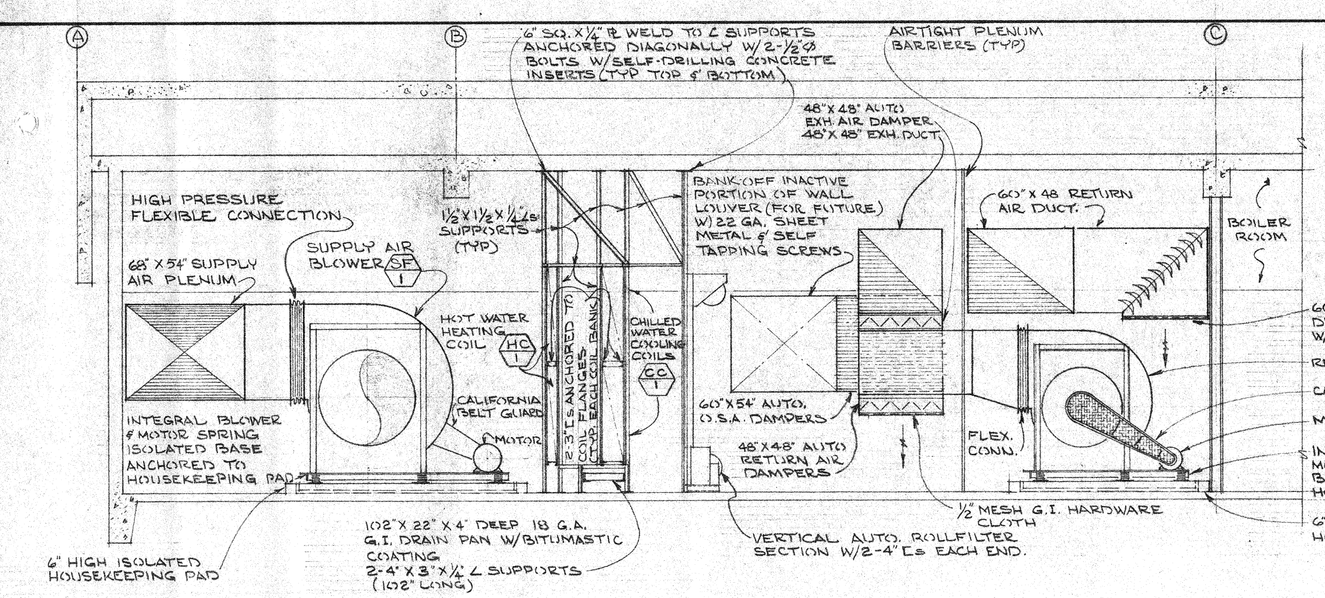

CENTRAL STATION BUILT-UP AIR HANDLING UNIT INSTALLATION DETAIL (A MP.15)
SCALE 1/4" 1'-0"

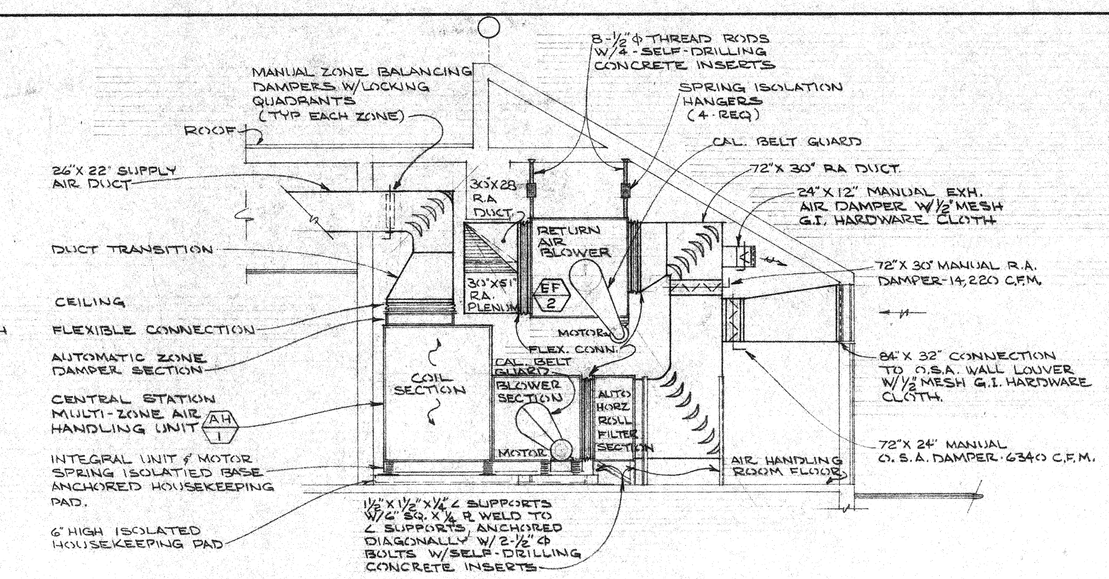

CENTRAL STATION M.Z. AIR HANDLING UNIT INSTALLATION DETAIL (B MP.15)
SCALE 1/4" 1'-0"

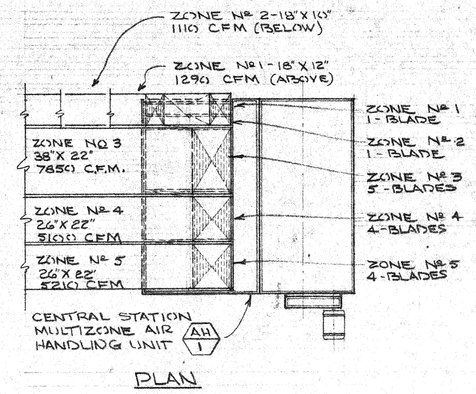

M.Z. AIR HANDLING UNIT ZONE AIR REQUIREMENTS (C MP.15)
SCALE 1/4" 1'-0"

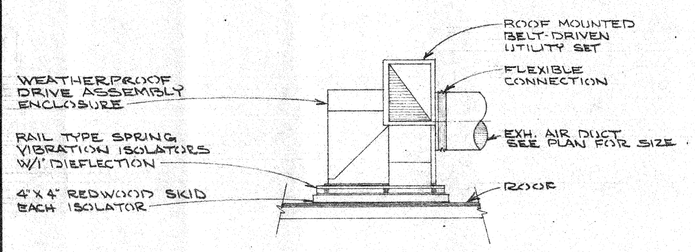

ROOF MOUNTED UTILITY SET INSTALLATION DETAIL (D MP.15)
SCALE NONE

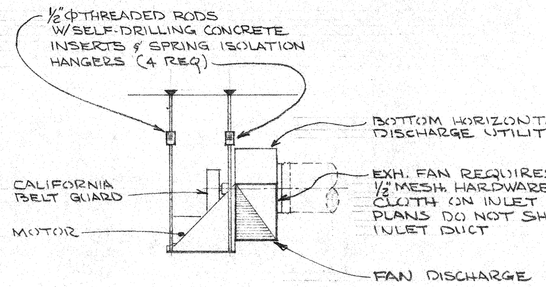

INDOOR TYPE UTILITY SET INSTALLATION DETAIL (E MP.15)
SCALE NONE

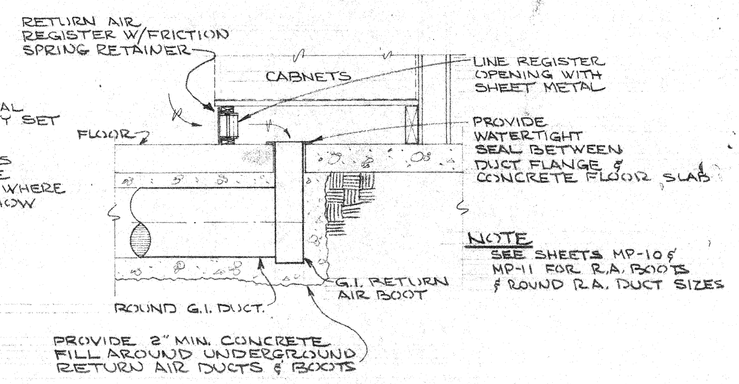

TOE SPACE RETURN AIR REGISTER INSTALLATION DETAIL (F MP.15)
SCALE NONE

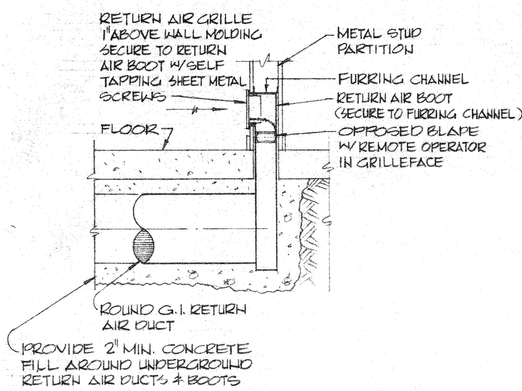

LOW SIDEWALL RETURN REGISTER INSTALLATION DETAIL (G MP.15)
SCALE NONE

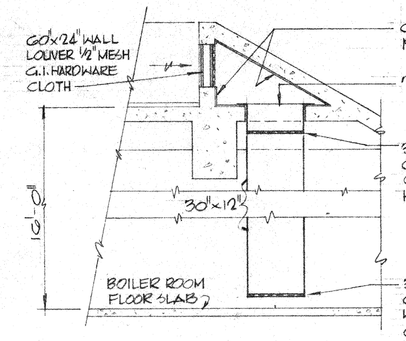

COMBUSTION AIR DUCT INSTALLTION DETAIL (SOUTH BLDG.) (H MP.15)
SCALE NONE

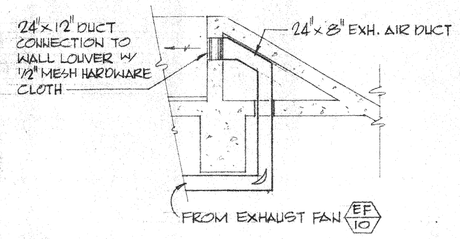

EXHAUST FAN - (EF-10) DISCHARGE DUCT INSTALLATION DETAIL (J MP.15)
SCALE 1/4" = 1'-0"

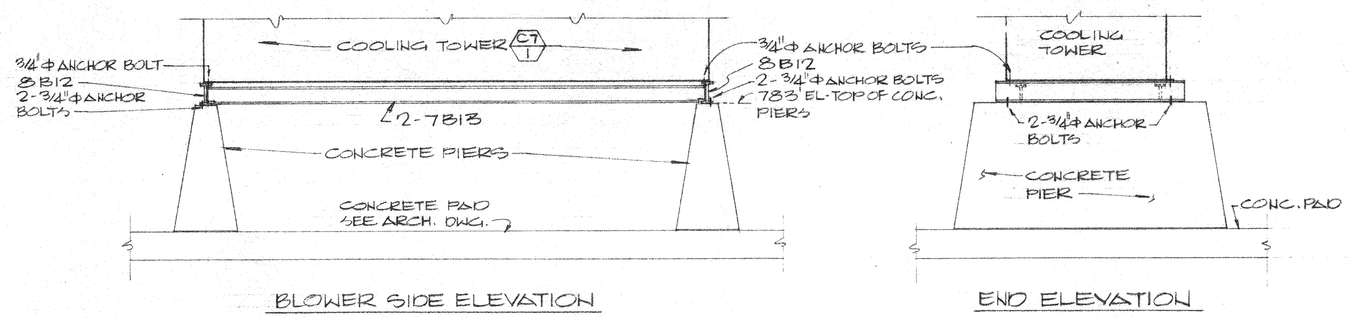

COOLING TOWER SUPPORT & INSTALLATION DETAIL (K MP.15)
SCALE 1/4" = 1'-0"

ROBERT MASON HOUVENER ARCHITECT
7760 BERSCHEE AVENUE LA JOLLA, CALIFORNIA 92037 TELE. 714/459-4085

CIVIC CENTER
CITY OF THOUSAND OAKS, CALIFORNIA

DETAILS & DIAGRAMS
AIR CONDITIONING

REVISIONS:

Blaylock Engineers
Mechanical and Electrical Engineering
1909 McKee Street, San Diego, Calif. 92110

MP 15
SHT. 13