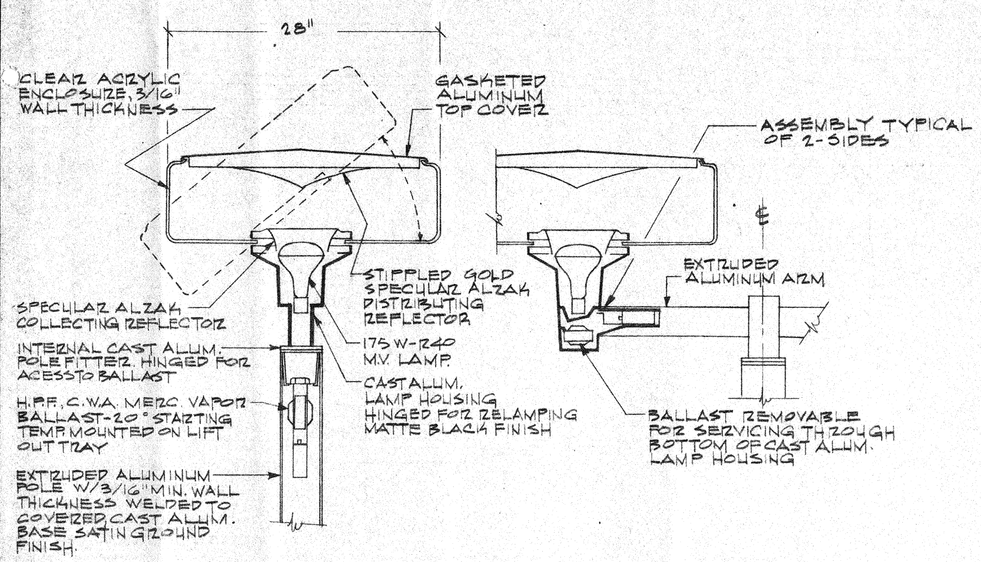

SINGLE UNIT
NO SCALE

DOUBLE UNIT
NO SCALE:

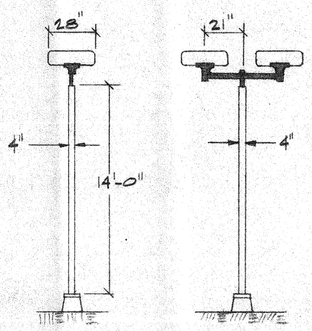

POLE ELEVATIONS
NO SCALE

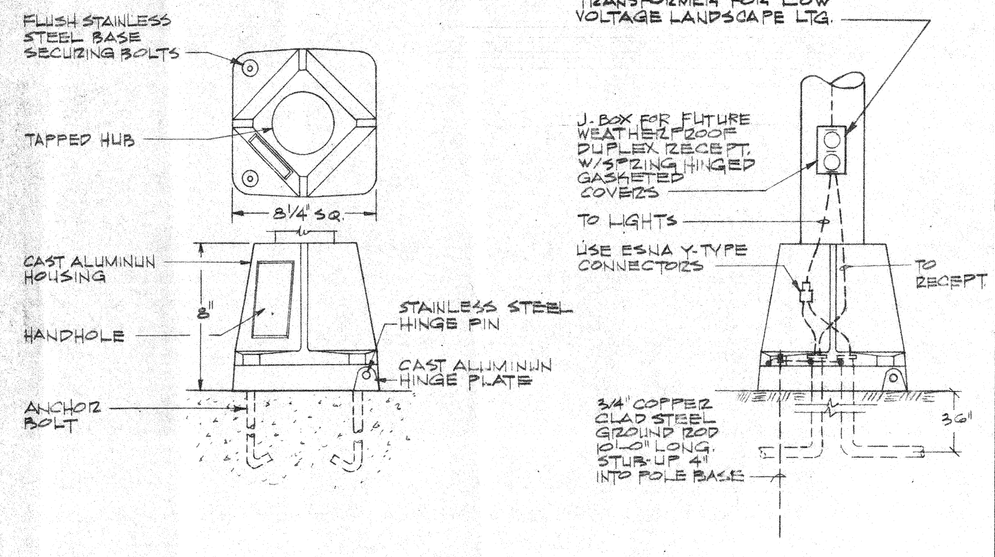

DETAILS POLE BASE
NO SCALE:

FIXTURE SCHEDULE (FINISHES BY ARCHITECT U.O.N.)

TYPE	DESCRIPTION	LAMPS	WATTS	VOLTS	MANUFACTURE	CAT. NO.	NOTES
1	SURFACE MTD. SQUARE	METALHALIDE	400	277	HOLLOPHANE	2004-277-P.F.B.	SPECIAL, SEE DETAIL
2	RECESSED MTD. SQUARE W/DROPPED REGRESS GLASS LENS	METALHALIDE	175	277	GUTH	B10-064/277 SLD	
2A	SAME AS #2 EXCEPT	METALHALIDE	400	277	GUTH	B10-065/277 SLD	
3	RECESSED ROUND W/AIR	PAR-R40	150	120	PRESCOLITE	83 AD-980	
4	RECESSED ROUND	PAR-R40	150	120	PRESCOLITE	83 N.D.	
5	RECESSED ROUND W/ BLACK PHENOLIC SLEEVE	A-21	150	120	PRESCOLITE	1054-724	EXTERIOR & INTERIOR USE
6	RECESSED ROUND	R-40	150	120	PRESCOLITE	1227-980	
7	RECESSED WALL WASHER	F40T12	(1)-40	120	HOLLOPHANE	F6044-430-4 LENS-6044 B FRAME-0104	
8	RECESSED 2'X4' W/4-LAMPS	F40T12 430MA.	(4)-40	277	GUTH	A04 5769F	K12 OPTILUX LENS.
9	SURFACE MTD. 4' LONG, 4-LAMPS	F40T12 430 MA.	(4)-40	277	GUTH	AC2-6598	
10	SURFACE MTD. 4' LONG, 2-LAMPS	F40T12 430 MA.	(2)-40	277	GUTH	M6505/277	
11	SURFACE MTD. 2-LAMPS	INCAND	(2)-40	120	PRESCOLITE	37G-1	EXTERIOR USE
12	OUTDOOR FLOODLIGHT	MERC. VAPOR	175	277	LIGHTOLIER	SEE DETAIL	SEE DETAIL FOR MOUNTING
13	POLE & POLE LIGHT	MERC. VAPOR	175	277	MOLD CAST	2474 SINGLE 2475 DOUBLE	SEE DETAILS
14	SURFACE MTD.	MERC. VAPOR	175	277	GUTH	B17054/CAB/277	
15	WALL MTD.	MERC. VAPOR	175	277	GUTH	B17042/CAB/277	
16	WALL MTD., SURFACE MTD.	INCAND	100	120	PRESCOLITE	4221	
17	FLUSH IN CONCRETE	MERC. VAPOR	175	120	BRONZOLITE	G-3175-MV-FB H.P.F. (BRONZE)	FOR UPLIGHT OF FLAGPOLE & FLAG.
18	WALL OR CEILING MTD. COMPLETE WITH EMERG. LT. RELAYS & BATT. PACKAGE W/CHARGE	FLUORESCENT	20	120	SILTRON	MINI-EM 4-120	16 1/4 x 5 5/8 x 4 7/8
	EXIT LIGHT & DUAL CIRC. & W/EMERGENCY LIGHT & BATTERY PACKAGE	INCAND	(4)-25W. (1)-15W.	120 12	MARCO	XEC, 21 XEW, 21 OR XEE	COMPLETE W/ UNIVERSAL MOUNTING ACCESSORIES & WITH DOWNLIGHT

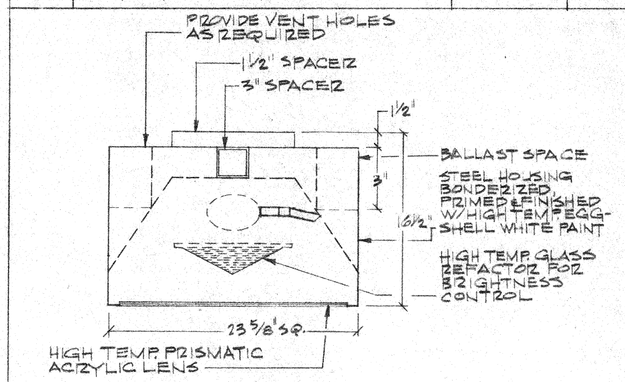

LIGHT FIXTURE #1
NO SCALE
HOLLOPHANE, MERCULUME SERIES W/SPECIAL HOUSING, 277V., 400W METAL HALIDE LAMP COMPLETE W/BALLAST, ACCESSORIES & FACTORY PREWIRE

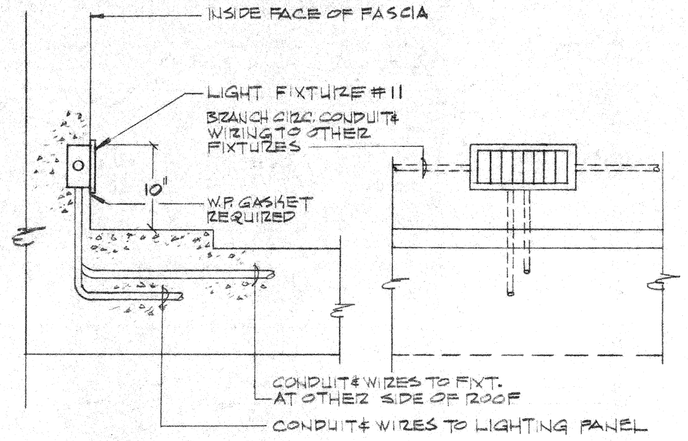

LIGHT FIXTURE MTG. AT ROOF PARKING AREAS
NO SCALE

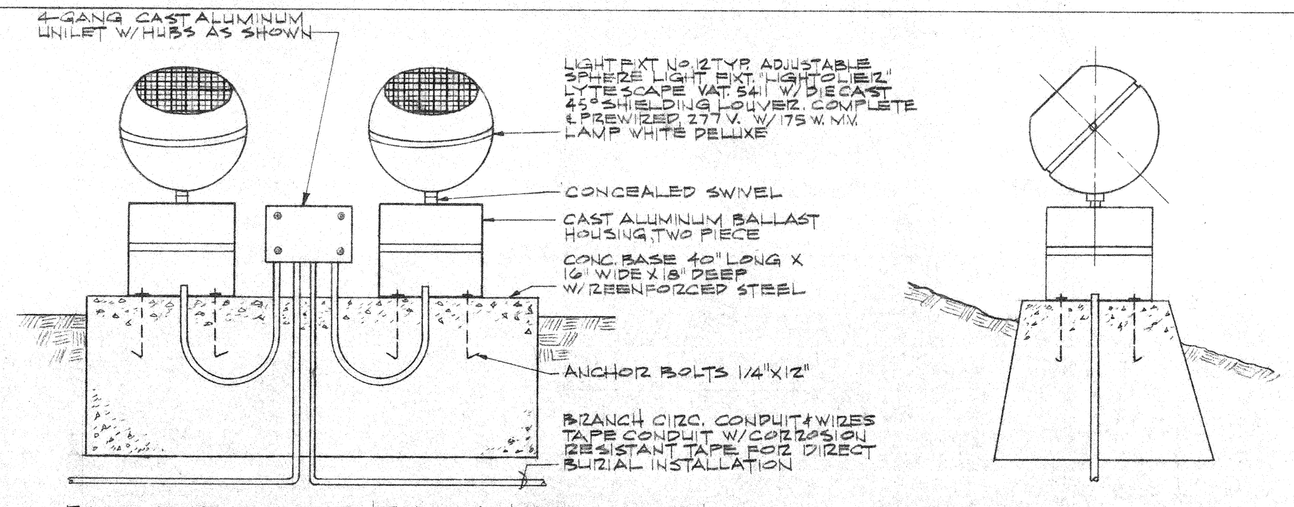

FASCIA FLOOD LIGHT ASSY. INSTALLATION
NO SCALE:
GROUND ALL METAL PARTS OR ASSEMBLIES.

ELECTRICAL SYMBOLS

3/R	LIGHT FIXTURE W/ FIXTURE NUMBER INSIDE "R" INDICATES LOW VOLTAGE SWITCHING RELAY IN JUNCTION BOX OF LIGHT FIXTURE
4 N OR E	LIGHT FIXTURE, "N" = NIGHT LIGHT, "E" = EMERGENCY LIGHT
	EXIT LIGHT, ARROWS INDICATE DIRECTIONAL INDICATION "D" = INCLUDING DOWNLIGHT.
$	SINGLE POLE SWITCH
$2,3,OR 4	NUMBER INDICATES 2-POLE, 3-WAY OR 4-WAY SWITCH
$K	KEYED SWITCH
$T	THERMAL OVERLOAD SWITCH
$P	SWITCH W/ PILOT LIGHT
$D	AUTOMATIC DOOR SWITCH
$LV	LOW VOLTAGE SWITCH
$LVM	LOW VOLTAGE MASTER SWITCH STATION
$RC	REMOTE CONTROL SWITCH
	DUPLEX CONVENIENCE RECEPTACLE
	FLUSH IN FLOOR RECEPTACLE, SEE SH. E-2
	SINGLE RECEPTACLE, SIZE AS INDICATED ON DRAWINGS.
S	SWITCHED RECEPTACLE
	3-PHASE, 4-WIRE, GROUNDED RECEPTACLE, NUMBER INDICATES AMPERE-RATING
C	CLOCK OUTLET
M	MICROPHONE OUTLET
S	SPEAKER STATION
R	RADIO OUTLET
TV	TELEVISION OUTLET
AM	AMPLIFIER STATION
A	ANTENNA OUTLET
IC	INTERCOM STATION
IC M	INTERCOM MASTER STATION
CD	CIVIL DEFENSE STATION
F	FIRE ALARM STATION
	MASTER FIRE ALARM STATION
FA	FIRE ALARM CONTROL STATION
F	FIRE ALARM BELL
H	FIRE ALARM HORN
AN	FIRE ALARM ANNUNCIATOR STATION
	TELEPHONE FLUSH FLOOR OUTLET, SEE SH. E-2
	PUBLIC PHONE BOOTH OR TELEPHONE SET
	TELEPHONE OUTLET
	LIGHTING PANEL OR POWER PANEL
1/4	MOTOR, NUMBER INDICATES HORSEPOWER
0	MANUAL STARTER, NUMBER INDICATES SIZE
2	MAGNETIC STARTER, NUMBER INDICATES SIZE
F	SAFETY SWITCH, "F" INDICATES FUSED "CB" INDICATES CIRC. BREAKER
F	COMBINATION STARTER, "F" INDICATES FUSED "CB" INDICATES CIRC. BREAKER
ST	SHUNT TRIP DEVICE ON CIRC. BREAKER
M 60	MAGNETIC CONTACTOR, NUMBER INDICATES SIZE
	UNDERFLOOR DUCT W/ INTEGRAL OUTLETS. OUTLETS MAY BE POWER, TELEPHONE OR OTHER AS INDICATED ON PLANS, SEE SH. E-2
	SERVICE RACEWAY, MULTI-RECEPTACLE
T	LETTER INDICATES: "T" = TELEPHONE "C" = INTERCOM "S" = SIGNAL
V.P.	INDICATES VAPORPROOF
E.P.	INDICATES EXPLOSIONPROOF
W.P.	INDICATES WEATHERPROOF
W.T.P.	INDICATES WATERPROOF
	BRANCH CIRCUIT CONCEALED IN WALL OR CEILING CROSS MARKS INDICATE NUMBER OF WIRES, WIRES ARE #12 A.W.G. U.O.N.
	BRANCH CIRCUIT CONCEALED IN FLOOR
	BRANCH CIRCUIT EXPOSED
	HOME RUN TO PANEL BOARD

FOR GENERAL NOTES SEE SH. E-2

Blaylock Engineers
Mechanical and Electrical Engineering
1909 McKee Street, San Diego, Calif. 92110
(714) 291-5400

ROBERT MASON HOUVENER ARCHITECT
2700 RESERVE AVENUE LA JOLLA, CALIFORNIA 92037 TELE. 714/459-4888

CIVIC CENTER
CITY OF THOUSAND OAKS, CALIFORNIA

SYMBOLS & LIGHT FIXTURES

REVISIONS

E1
SHT. 75