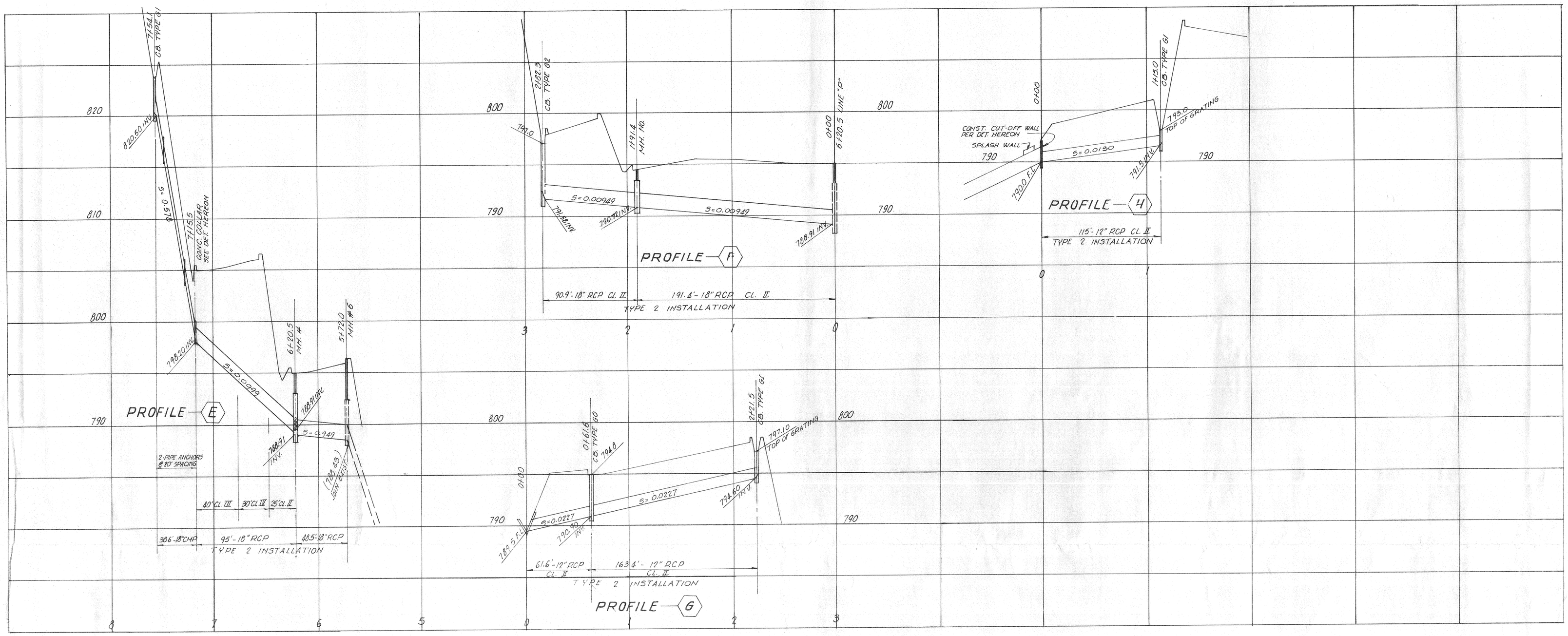

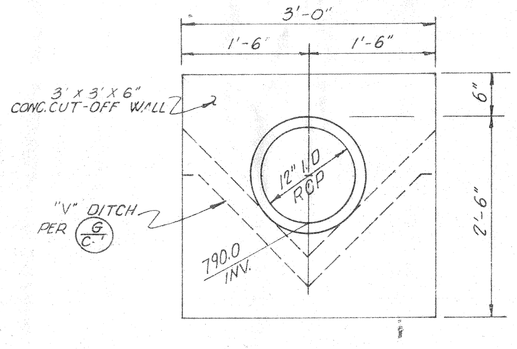

CONC. CUT-OFF WALL DETAIL
SCALE 1" = 1'-0"

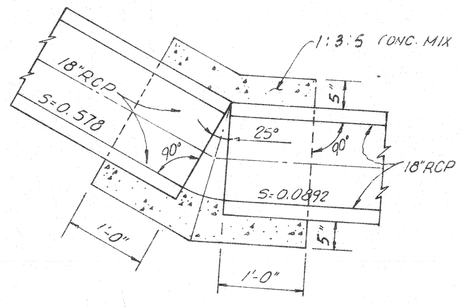

CONC COLLAR DETAIL
SCALE 1" = 1'-0"

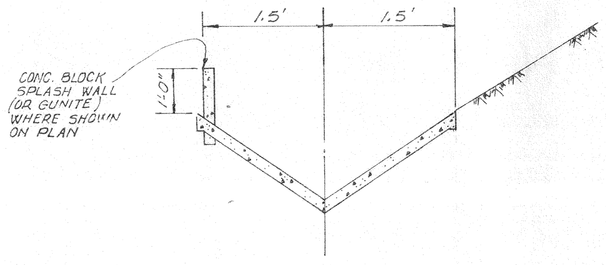

SPLASH WALL DETAIL
NOT TO SCALE

PROFILE
STORM DRAIN

JUN 24 1971

ROBERT MASON HOUVENER ARCHITECT
7760 HERSCHEL AVENUE LA JOLLA, CALIFORNIA 92037 TELE: 714/459-4069

CIVIC CENTER
CITY OF THOUSAND OAKS, CALIFORNIA

VA-CO, INC
1499 THOUSAND OAKS BLVD.
THOUSAND OAKS, CALIF. 91360
PH: (213) 659-8822 (805) 495-3464

C19
SHT. 18C

CITY OF THOUSAND OAKS DRAWING NO 71-61A